SILVERADO/SIERRA PICKUP 1999-03

SECTION INDEX

A/C /HEATER/VENTILATION 1302
A/C REFRIGERANT CAPACITIES 1302
ABS/BRAKES 1304
AIR BAG SYSTEM 1303
AIR CLEANER 1312
BACK WINDOW 1325
CAB 1316
CENTER CONSOLE 1316
CLEAR COAT IDENTIFICATION 1298
COOLING 1301
CRUISE CONTROL SYSTEM 1304
ELECTRICAL 1314
EMISSION SYSTEM 1313
ENGINE OIL COOLER 1302
ENGINE/TRANS 1311
ENGINE/TRANS MOUNTS 1312
EXHAUST 1313
FRAME 1304
FRONT BUMPER 1298
FRONT DOOR 1321
FRONT DRIVE AXLE 1308
FRONT FENDER 1303
FRONT LAMPS 1299
FRONT SEAT 1320
FRONT STEERING LINKAGE/GEAR 1309
FRONT SUSPENSION 1307
FUEL TANK 1328
GRILLE 1299
HOOD 1301
INFORMATION LABELS 1298
INSTRUMENT PANEL 1315
PAINT CODE LOCATION 1298
PICKUP BED 1325
QUARTER GLASS 1324
REAR BUMPER 1329
REAR DOOR 1322
REAR LAMPS 1329
REAR SEAT 1320
REAR STEERING LINKAGE/GEAR 1328
REAR SUSPENSION 1327
SEAT BELTS 1320
SPECIAL CAUTIONS 1298
STEERING GEAR 1309
STEERING LINKAGE 1309
STEERING PUMP 1309
STEERING WHEEL/COLUMN 1310
TURBOCHARGER/INTERCOOLER 1313
UNDERHOOD DIMENSIONS 1303
WHEEL 1306
WINDSHIELD 1315

SPECIAL CAUTIONS

AIR BAGS

Refer to Procedure Explanation 29 for Supplemental Restraint/Air Bag Special Cautions.

PAINT CODE LOCATION

Paint code located in glove box.

CLEAR COAT IDENTIFICATION

All colors are clear coat.

INFORMATION LABELS

Illustration Located in Next Column

1	**Label, Emission Cont¶**	99	12560775	10.42
		00-03	12457796	10.42
2	**Label, Evaporative Emissions¶**		12560938	10.42
3	**Label, Belt Routing¶**		15750971	10.42
	¶Order by Application			
4	**Label, Air Bag Caution**	99-01	15068215	10.42
		02-03	15082001	10.42
5	**Label, Pass Air Bag Caution**	99	15001744	10.42
		00-03	15765539	10.42
6	**Label, Jack Caution & Usage**			
	1999-00			
	1500		15732622	10.42
	2500		15732623	10.42
	2001-03			
	1500, 2500 Series			
	Std Cab, Extended Cab		15069228	10.42
	Crew Cab		15069229	10.42
	2500 HD, 3500 Series		15069227	10.42
7	**Label, Fuel Warning**			
	"Diesel Fuel Only"		15743131	9.66
	Label, Fuel Recommendation			
	Flex Fuel		15070512	9.86
8	**Label, Odometer Notice**		10443718	10.42
	Label, Child Lock			
	Information	R/L	15953618	10.42
	Operating Instruction	01 R/L	15027340-39	10.42
		02-03 R/L	15072782-1	10.42
	Label, Child Seat			
	Std Cab, Extended Cab		15002610	10.42
	Crew Cab	01	15001737	10.42
		02-03	15006352	10.42
	Label, Keyless Entry		15018377	10.42
	Label, Torsion Bar Caution		15772975	10.42
	Label, Rear Axle Lube		15043008	10.42

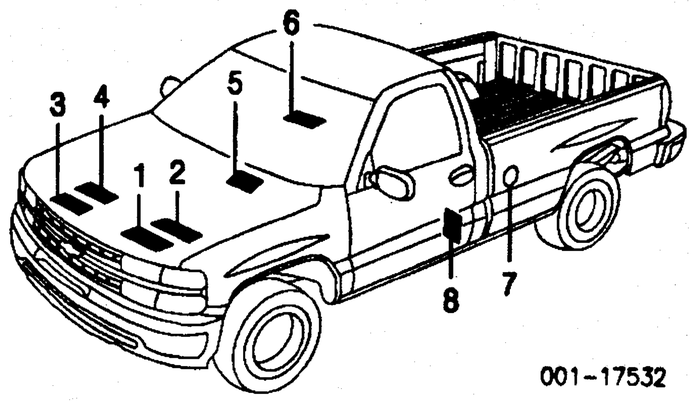

001-17532

FRONT BUMPER

Use Procedure Explanations 1 and 28 with the following text.

CHEVROLET 1999-02

Refinish Face Bar	1.7
Refinish Face Bar Trim Cap	1.2
R&I Bumper Assy	#1.0
O/H Bumper Assy (Includes R&I)	#1.6
#Includes R&I Grille	
Add to R&R or O/H Bumper Assy w/Fog Lamps	#.4
#Includes R&I/R&R Fog Lamps	

NOTE: All Parts in this section are included in overhaul unless noted otherwise.

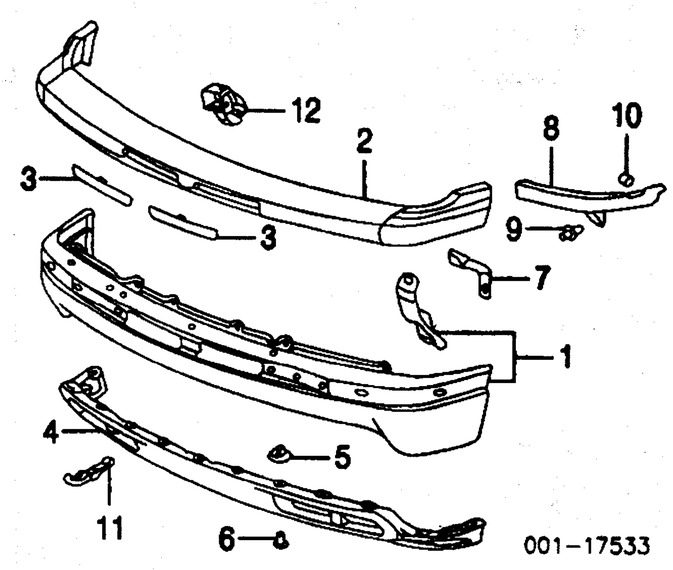

001-17533

1	**Bar, Face**			
	Chrome		12472946	#1.6 367.32
	Painted		12472997	#1.6 367.32
	#Includes R&I Grille			
2	**Cap, Face Bar Trim**			
	1500, 2500 Series		15050703	#1.3 101.69
	2500 HD, 3500 Series		15746399	#1.3 180.51
	#Includes R&I Bumper Assy			
3	**Cover, Cap Opening**	R	15018587	#.1 10.17
		L	15018558	#.1 10.17
	#Included in R&R Face Bar Trim Cover			
4	**Deflector, Air¶**			
	2WD			
	w/Fog Lamps		15005294	#.8 82.27
	#Includes R&I/R&R Fog Lamps			
	w/o Fog Lamps		15708797	.4 86.22
	4WD			
	w/Off Road Pkg (RPO-BPH)		15766483	.4 198.31
	w/o Off Road Pkg (RPO-BPH)		15005294	.4 82.27
	¶Order by Application			
5	**Retainer, Air Defl¶**		15733970	3.66
6	**Pin, Retainer¶**		15733971	3.66
	¶As Required			
7	**Brace, Outer Bar**			
	1500 Series			
	Std Cab, Extended Cab	R/L	15705658-7	#.2 26.54
	Crew Cab	R/L	15705678-7	#.2 26.54
	2500, 3500 Series	R/L	15705678-7	#.2 26.54
	#Not Included in O/H Bumper Assy			
8	**Filler, Bumper**	R/L	15035438-7	.3 15.05
9	**Retainer, Bumper Filler**	R/L	21110201	3.66
10	**Clip, Bumper Filler**	R/L	15037290	3.66
11	**Hook, Tow-See Frame Section**			
12	**Bracket Kit, Impact Bar¶**			
	1500 Series			
	Std Cab, Extended Cab	R/L	12474013-2	#1.5 102.20
	Crew Cab	R/L	12474444-3	#1.5 108.90
	2500, 3500 Series	R/L	12474444-3	#1.5 108.90
	¶Included w/Frame Assy			
	#Not Included in O/H Bumper Assy			

CHEVROLET 2003 W/SPORT PKG

Refinish Front Cover	2.6
R&I Bumper Assy	#1.0
O/H Bumper Assy (Includes R&I)	#2.0
#Includes R&I Grille & R&I/R&R Fog Lamps	

NOTE: All Parts in this section are included in overhaul unless noted otherwise.

Bar, Bumper		15178163	IOH	0.00
Cover, Bumper		12335659	#2.0	0.00
#Includes R&I Grille & R&I/R&R Fog Lamps				
Bracket, Upper Cover (2/Side)	R/L	15181856		0.00
Bracket, Lower Cover	R/L	15182637-6		0.00
Bracket, Side Cover	R/L	15182635		0.00
Bracket, Bumper	R/L	12335638-7		108.90
Brace, Bumper	R	15184117		13.90
	L	15184118		15.00

CHEVROLET 2003 W/O SPORT PKG

Refinish Face Bar	1.7
Refinish Face Bar Trim Cap	1.2
R&I Bumper Assy	#1.0
O/H Bumper Assy (Includes R&I)	#1.6
#Includes R&I Grille	
Add to R&R or O/H Bumper Assy w/Fog Lamps	#.4
#Includes R&I/R&R Fog Lamps	

NOTE: All Parts in this section are included in overhaul unless noted otherwise.

Bar, Face¶				
Chrome		15187976	#1.6	d0.00
Painted		15187977	#1.6	d0.00
¶Order by Application				
#Includes R&I Grille				
Cap, Bumper				
1500, 2500 Series		15059627	1.3	0.00
2500 HD Series		15187973	1.3	0.00
#Includes R&I Bumper Assy				
Deflector, Air				
w/Fog Lamps		15167332	#.8	84.92
#Includes R&I/R&R Fog Lamps				
w/o Fog Lamps		15167331	.4	84.92
Retainer, Air Deflector (11)		15733971		3.66
Pin, Retainer		15733970		3.66
Brace, Outer Bar	R/L	15059654-5	#.2	13.72
Hook, Tow	R/L	15029041-0	#.2	0.00
Bracket Kit, Bumper				
1500 Series	R/L	12335636-7	#1.5	108.90
2500 Series	R/L	12335638-9	#1.5	108.90
Bracket, Bumper				
2500 HD, 3500 Series	R/L	15059693-4	#1.5	16.95
#Not Included in O/H				

GMC SIERRA 1999-02

Refinish Face Bar	1.6
Refinish Face Bar Trim Cap	1.2
R&I Bumper Assy	#1.0
#Includes R&I Grille	
O/H Bumper Assy (Includes R&I)	#1.6
#Includes R&I Grille	
Add to R&R or O/H Bumper Assy w/Fog Lamps	#.4
#Includes R&I/R&R Fog Lamps	

NOTE: All Parts in this section are included in overhaul unless noted otherwise.

Illustration Located in Next Column

1	**Bar, Face¶**			
	Chrome			
	w/Air Holes		15095839	#1.6 367.32
	w/o Air Holes		12472946	#1.6 367.32

Labor Times Shown are for Replacement with New OEM Undamaged Parts on New Undamaged Vehicles.
Comments or suggestions? Need assistance? Call 1-800-854-7030 or 858-578-6550. Ext. 8220. Fax 1-888-256-7969 or 858-549-0629.

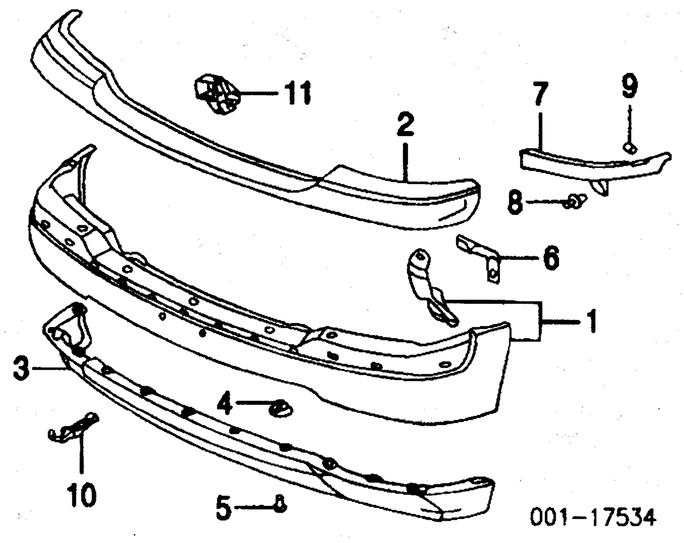

Painted	99-01	15050711	#1.6	367.32
¶Order by Application				
#Includes R&I Grille				
2 **Cap, Face Bar Trim**				
1500, 2500 Series				
Chrome Face Bar				
SL Model		15748374	#1.3	78.81
SLE, SLT Model (P)		12477935	#1.3	173.29
Painted Face Bar		15748374	#1.3	78.81
2500 HD, 3500 Series		15006993	#1.3	144.00
(P) Paint to Match				
#Includes R&I Bumper Assy				
3 **Deflector, Air**				
w/Fog Lamps		15709111	#.8	84.92
#Includes R&I/R&R Fog Lamps				
w/o Fog Lamps				
w/Tow Hook		15005293	.4	84.92
w/o Tow Hook	99-00	15708798	.4	84.92
	01-02	15005293	.4	84.92
4 **Retainer, Air Def¶**		15733970		3.66
5 **Pin, Retainer¶**		15733971		3.66
¶As Required				
6 **Brace, Outer Bar**				
1500 Series				
Std Cab, Extended Cab	R/L	15705658-7	#.2	26.54
Crew Cab	R/L	15705678-7	#.2	26.54
2500, 3500 Series	R/L	15705678-7	#.2	26.54
#Not Included in O/H Bumper Assy				
7 **Filler, Bumper**	R/L	15049380-1	.3	15.05
8 **Retainer, Bumper Filler**	R/L	21110201		3.66
9 **Clip, Bumper Filler**	R/L	15037290		3.66
10 **Hook, Tow-See Frame Section**				
11 **Bracket Kit, Impact Bar¶**				
1500 Series				
Std Cab, Extended Cab	R/L	12474013-2	#1.5	102.20
Crew Cab	R/L	12474444-3	#1.5	108.90
2500, 3500 Series	R/L	12474444-3	#1.5	108.90
¶Included w/Frame Assy				
#Not Included in O/H Bumper Assy				

GMC SIERRA 2003

Refinish Bumper Cover	1.6
R&I Bumper Assy	#1.0
O/H Bumper Assy (Includes R&I)	#1.6
#Includes R&I Grille	
Add to R&R or O/H Bumper Assy	
w/Fog Lamps	#.4
#Includes R&I/R&R Fog Lamps	

NOTE: All Parts in this section are included in O/H unless noted otherwise.

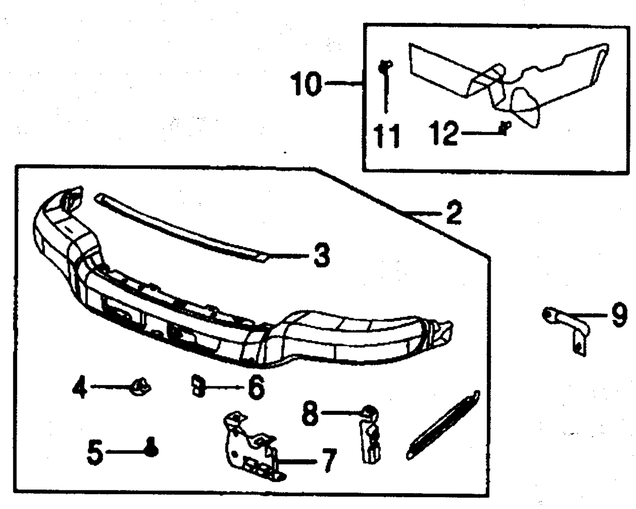

1 **Cover, Bumper**

SLE Model				
w/Fog Lamps		88979837	#1.6	0.00
w/o Fog Lamps		88979836	#1.6	0.00
SLT Model		15161544	#1.6	0.00
#Includes R&I Grille				
2 **Bar Assy, Impact**				
SLE Model				
w/Fog Lamps		12335648	IOH	480.00
w/o Fog Lamps		12335649	IOH	480.00
SLT Model		15174315	IOH	0.00
3 **Filler, Center¶**		15098996	.2	25.42
4 **Retainer, Upper Bumper¶ (6)**		15153415		3.66
5 **Retainer, Lower¶ (17)**				
13mm		15733971		3.66
16mm		15733970		3.66
6 **Nut, Retaining¶ (4)**		22531616		2.04
7 **Brace, Impact Bar¶**	R/L	15098993-2		13.72
8 **Bracket, Outer¶**	R/L	15098995-4		16.95
¶Included w/Impact Bar Assy				
9 **Brace, Outer**				
1500 Series				
Std Cab, Extended Cab	R/L	15184117-6	#.2	13.90
Crew Cab	R/L	15184119-8	#.2	15.00
2500, 3500 Series	R/L	15184119-8	#.2	15.00
#Not Included in O/H				
10 **Filler Assy, Outer**	R/L	15049380-1	#.2	15.05
#w/Bumper Assy Removed, Not Included in O/H				
11 **Retainer, Inner¶**	R/L	10185866		.73
12 **Retainer, Outer¶**	R/L	21110201		3.66
¶Included w/Outer Filler Assy				

GMC SIERRA C3, SIERRA DENALI

Refinish Front Cover	2.6
R&I Bumper Assy	#1.0
O/H Bumper Assy (Includes R&I)	#2.0
#Includes R&I Grille & R&I/R&R Fog Lamps	

NOTE: All Parts in this section are included in overhaul unless noted otherwise.

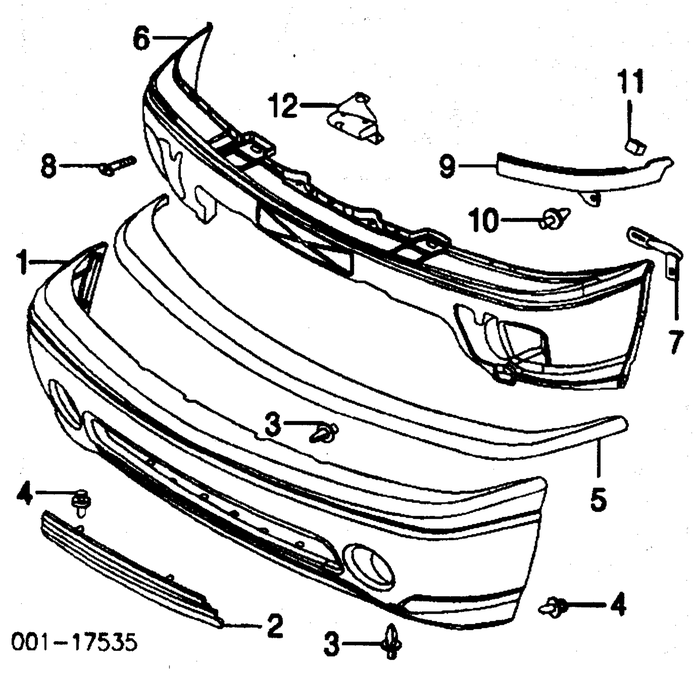

1 **Cover, Bumper (P)**		12479754	#2.0	371.49
(P) Paint to Match				
#Includes R&I Grille & R&I/R&R Fog Lamps				
2 **Insert, Bumper**		15153490		108.61
3 **Retainer (7)**		14093088		.67
4 **Retainer (12)**		15149708		3.86
5 **Filler, Upper Bumper**		88937235		73.12
6 **Bar, Impact**		15060470	IOH	367.32
7 **Brace, Outer Bar**	R/L	15705658-7		26.54
8 **Stud, Impact Bar¶**	R/L	11518224		9.95
¶As Required				
9 **Filler, Outer Bumper**	R	15046666		15.05
	L	15046662		15.05
10 **Retainer, Filler**	R/L	21110201		3.66
11 **Clip, Bumper Filler**	R/L	15037290		3.66
12 **Bracket Kit, Impact Bar¶**	R/L	12474013-2	#1.5	102.20
¶Included w/Frame Assy				
#Not Included in O/H Bumper Assy				

GRILLE

1999-02

R&I Grille	.3

Illustration Located in Next Column

Grille				
1 Chevrolet				
Light Gray	99	15032586	#.5	297.97
Dark Gray		15764314	#.5	298.47
Chrome				
1500, 2500 Series		15764313	#.5	320.34
2500 HD, 3500 Series		15088290	#.5	408.00
2 GMC				
Sierra				
Argent		15082217	#.5	305.80

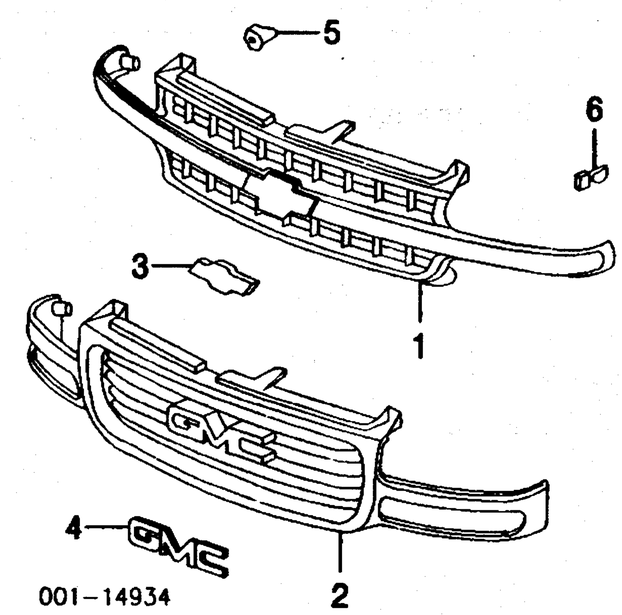

Chrome				
1500, 2500 Series		15082218	#.5	320.34
2500 HD, 3500 Series		15082219	#.5	408.00
Sierra C3, Sierra Denali		15755395	#.5	408.00
Emblem				
3 Chevrolet		15706324	#.5	10.07
4 GMC		15706323	#.5	19.32
#R&R Complete				
Nut, Emblem		15002519		1.02
5 **Retainer, Grille (4)**				
Push-In		15764320		1.32
6 **Clip, Grille**	R/L	15002520		.61

2003

R&I Grille	.3

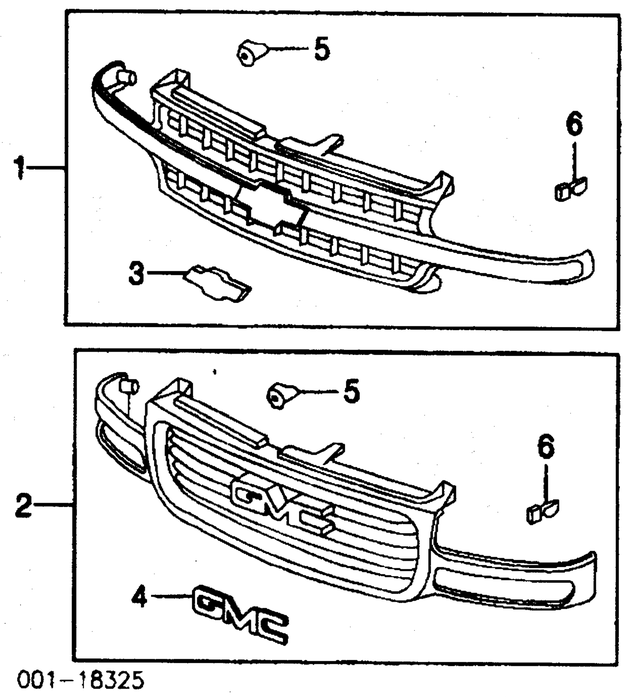

Grille Assy				
1 Chevrolet				
Black (RPO-41U)		15182297	.3	379.66
Blue (RPO-91U)		15182287	.3	379.66
Gray (RPO-62U)		15182286	.3	379.66
Green (RPO-47U)		15182299	.3	379.66
Pewter (RPO-11U)		15182296	.3	379.66
Red				
RPO-51U		15182301	.3	379.66
RPO-74U		15182300	.3	379.66
White (RPO-50U)		15182298	.3	379.66
Chrome		15182294	.3	305.80
2 GMC¶				
1500, 2500 Series				
Chrome		15773419	.3	335.59
Painted		15773418	.3	305.80
2500, 3500 Series		15070276	.3	408.00
¶Order by Application				
Emblem, Grille				
3 Chevrolet¶		12335633	.4	10.42
4 GMC¶		15706323	.4	19.32
Nut, Emblem		15002519		1.02
5 **Retainer, Grille¶ (4)**		15768343		3.66
6 **Clip, Grille¶ (4)**		15033681		3.66
¶Included w/Grille Assy				

FRONT LAMPS

HEADLAMP 1999-02

Aim Lamps		.4
R&I Headlamp Assy	R/L	.3

NOTE: R&R Does Not include aim lamps.

FRONT LAMPS Cont'd

HEADLAMP
1999-02 Cont'd

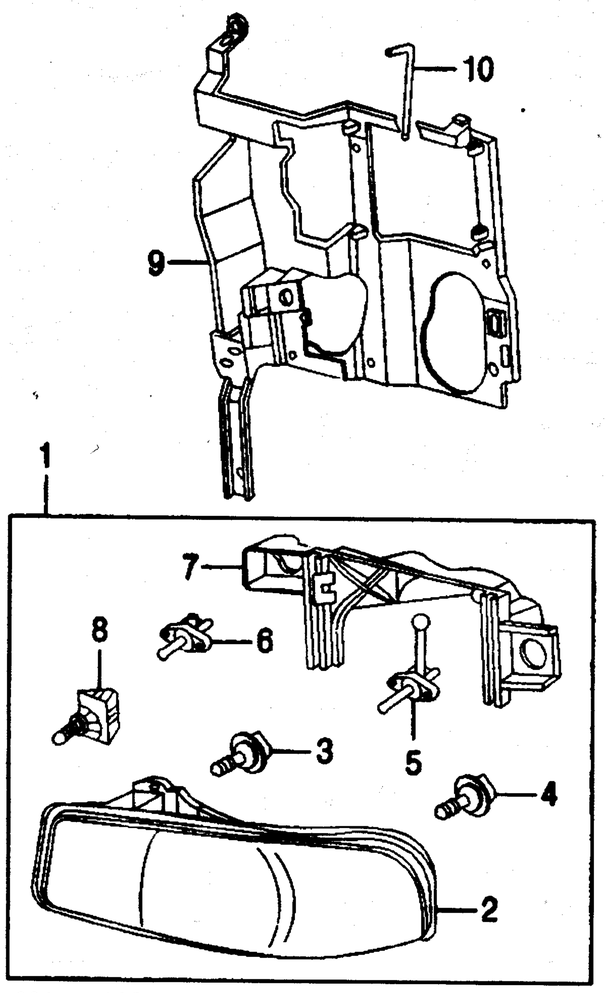

001-14935

1 **Headlamp Assy**				
Chevrolet	R/L	16526134-3	.3	253.30
GMC				
Sierra	R/L	16526136-5	.3	253.30
Sierra C3, Sierra Denali	R/L	15166757-6	.3	254.50
2 **Lens & Housing¶**				
Chevrolet	R	16526134	.4	253.30
	L	16524849	.4	d194.82
GMC				
Sierra	R/L	16526136-5	.4	253.30
Sierra C3, Sierra Denali	R/L	N.A.	.4	0.00
3 **Bulb, High Beam¶**	R/L	9441732	#.2	■14.22
4 **Bulb, Low Beam¶**	R/L	9441733	#.2	■14.22
#R&R One Side Complete, Included in R&R Lens & Housing				
5 **Adjuster, Vertical¶**				
Chevrolet	R/L	16524771		9.50
GMC				
Sierra	R/L	16524774		9.50
Sierra C3, Sierra Denali	R/L	N.A.		0.00
6 **Adjuster, Horizontal¶**	R/L	16524772		9.50
7 **Bracket, Mounting¶**				
Chevrolet	R/L	16524538-7	#.4	33.10
GMC				
Sierra	R/L	16524544-3	#.4	33.10
Sierra C3, Sierra Denali	R/L	N.A.	#.4	0.00
#Includes R&R Headlamp Housing				
8 **Stud, Pivot Ball¶**				
Chevrolet	R/L	16525358		5.61
GMC				
Sierra	R/L	16524781		5.61
Sierra C3, Sierra Denali	R/L	N.A.		0.00
¶Included w/Headlamp Assy				
9 **Support, H/Lamp Hsg**	R	15751697	#.2	15.58
	L	15750785	#.2	15.58
#w/Headlamp Housing Removed				
10 **Pin, H/Lamp Mount Panel** (2/Side)	R/L	15738764		3.60

HEADLAMP
2003
CHEVROLET

Aim Lamps 4
R&I Headlamp Assy ..... R/L .3

NOTE: R&R Does Not include aim lamps.

Illustration Located in Next Column

1 **Headlamp Assy**	R/L	16526138-7	.3	254.50
2 **Bulb, High Beam¶**	R/L	9441732	#.2	■14.22
3 **Bulb, Low Beam¶**	R/L	9441733	#.2	■14.22
¶Included w/Headlamp Assy				
#R&R One Side Complete, Included in R&I Headlamp Assy				
4 **Support, Headlamp**	R/L	15188404-3	#.2	12.50
#w/Headlamp Assy Removed				

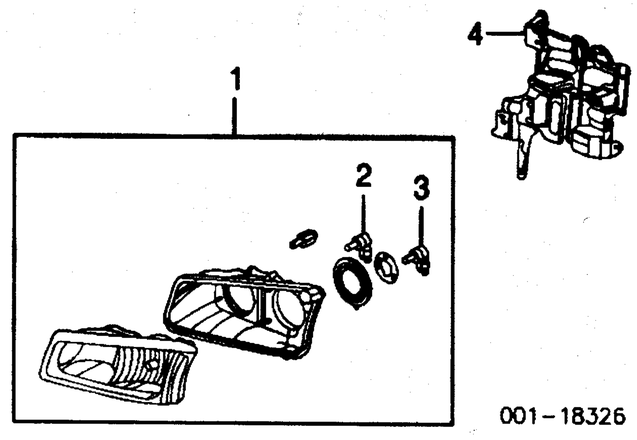

001-18326

HEADLAMP
2003
GMC

Aim Lamps 4
R&I Headlamp Assy ..... R/L .3

NOTE: R&R Does Not include aim lamps.

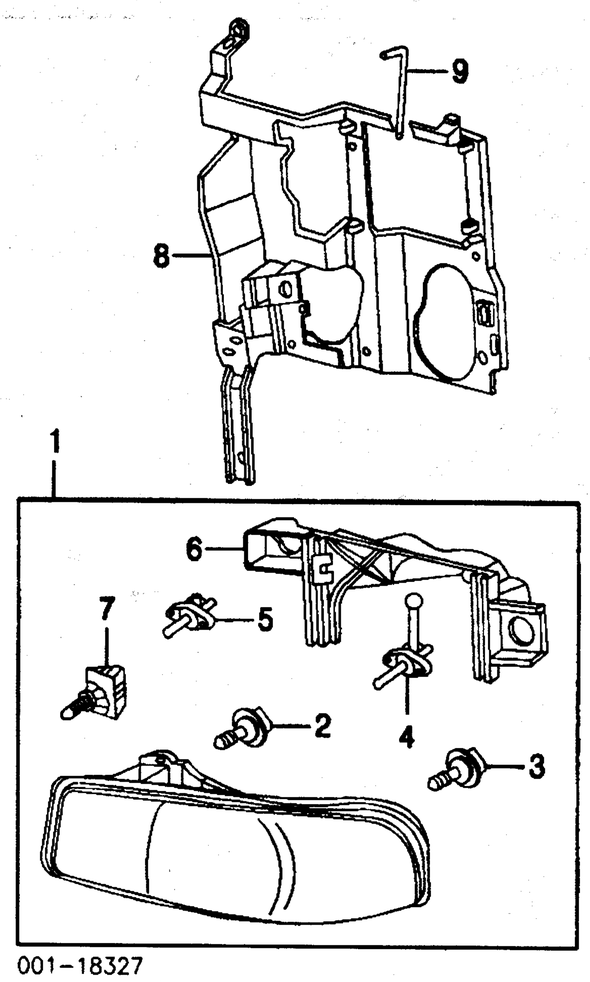

001-18327

1 **Headlamp Assy**				
Sierra	R/L	16526136-5	.3	253.30
Sierra Denali	R/L	15166757-6	.3	254.50
2 **Bulb, High Beam¶**	R/L	9441732	#.2	■14.22
3 **Bulb, Low Beam¶**	R/L	9441733	#.2	■14.22
#R&R One Side Complete, Included in R&I Headlamp Assy				
4 **Adjuster, Vertical¶**				
Sierra	R/L	16524774		9.50
Sierra Denali-Serviced w/Headlamp Assy				
5 **Adjuster, Horizontal¶**				
Sierra	R/L	16524772		9.50
Sierra Denali-Serviced w/Headlamp Assy				
6 **Bracket, Mounting¶**				
Sierra	R/L	16524544-3	.4	33.10
Sierra Denali-Serviced w/Headlamp Assy				
7 **Stud, Pivot Ball¶**				
Sierra	R/L	16524781		5.61
Sierra Denali	R/L	N.A.		0.00
¶Included w/Headlamp Assy				
8 **Support, Headlamp**	R/L	15172197-6	#.2	12.50
#w/Headlamp Assy Removed				
9 **Pin, H/Lamp Mount Panel**	R/L	15738764		3.60

COMBINATION LAMP
CHEVROLET

R&I Combination Lamp ..... R/L #.2
#w/Headlamp Assy Removed

Illustration Located in Next Column

Lamp, Combination				
1 1999-02	R/L	16526124-3	#.2	79.80
2 2003	R/L	15174061-0	#.2	79.80
3 **Bulb, DRL**	99-02 R/L	12450108	#.2	■2.55
	03 R/L	12450182	#.2	■7.42
4 **Bulb, Park Lamp**	99-02 R/L	15772605	#.2	■1.86
	03 R/L	9442399	#.2	3.78

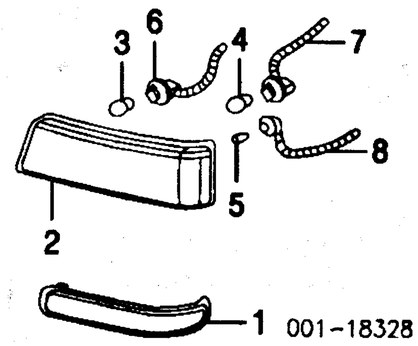

001-18328

5 **Bulb, Side Marker Lamp**	R/L	9421330	#.2	■.62
Bulb, Signal Lamp	99-02 R/L	15772605	#.2	■1.86
	03 R/L	9442399	#.2	3.78
#R&R One Side Complete, w/Headlamp Assy Removed				
6 **Socket, DRL**	R/L	15306157	#.1	18.14
7 **Socket, Park Lamp**	R/L	12003759	#.1	18.61
8 **Socket, Side Marker Lamp**	R/L	12141388	#.1	38.44
Socket, Signal Lamp	99-02 R/L	15306147	#.1	18.37
	03 R/L	N.A.	#.1	0.00
#w/Combination Lamp Removed				

COMBINATION LAMP
GMC SIERRA

R&I Combination Lamp ..... R/L #.2
#w/Headlamp Assy Removed

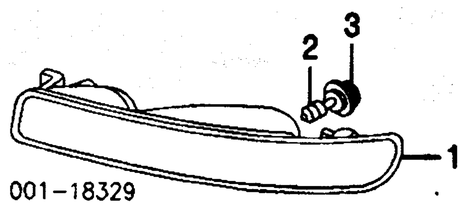

001-18329

1 **Lamp, Combination**	R/L	16526126-5	#.2	79.80
2 **Bulb, DRL**	R/L	12450182	#.2	■7.42
3 **Bulb, Park Lamp**	R/L	15772605	#.2	■1.86
Bulb, Side Marker	R/L	9421330	#.2	■.62
#R&R One Side Complete, w/Headlamp Assy Removed				
Socket, DRL	R/L	15306157	#.1	18.14
Socket, Park Lamp	R/L	N.A.	#.1	0.00
Socket, Side Marker Lamp	R/L	N.A.	#.1	0.00
#w/Combination Lamp Removed				

COMBINATION LAMP
GMC SIERRA DENALI

R&I Combination Lamp ..... R/L #.2
#w/Headlamp Assy Removed

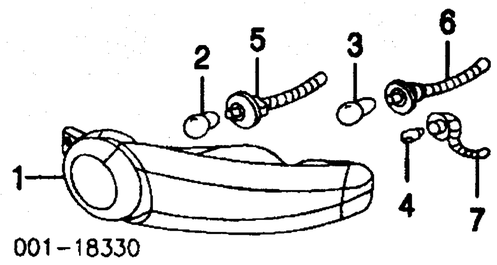

001-18330

1 **Lamp, Combination**	R	15151000	#.2	79.80
	L	15150999	#.2	79.80
2 **Bulb, DRL**	R/L	12450182	#.2	■7.42
3 **Bulb, Signal Lamp**	R/L	9442399	#.2	3.78
4 **Bulb, Side Marker Lamp**	R/L	9421330	#.2	■.62
#R&R One Side Complete, w/Headlamp Assy Removed				
5 **Socket, DRL**	R/L	15306157	#.1	18.14
6 **Socket, Signal Lamp**	R/L	15306147	#.1	18.37
7 **Socket, Side Marker Lamp**	R/L	N.A.	#.1	0.00
#w/Combination Lamp Removed				

FOG LAMP
CHEVROLET, GMC SIERRA
1999-02

R&I Fog Lamp Assy ..... R/L .3

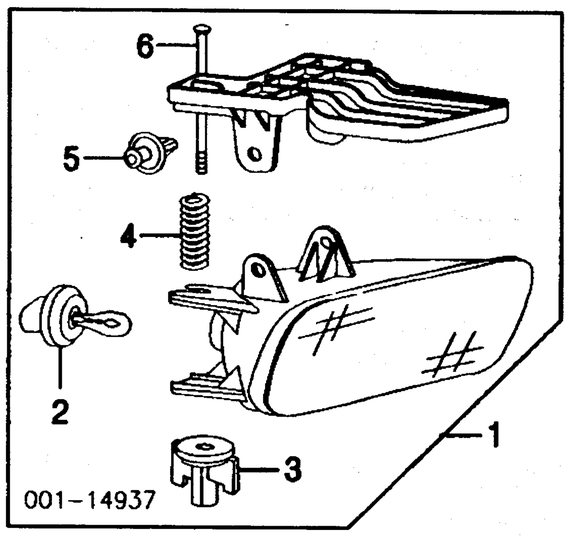

001-14937

Labor Times Shown are for Replacement with New OEM Undamaged Parts on New Undamaged Vehicles.
Comments or suggestions? Need assistance? Call 1-800-854-7030 or 858-578-6550. Ext. 8220. Fax 1-888-256-7969 or 858-549-0629.

1 **Lamp Assy, Fog**				
Chevrolet	R/L	15060951-0	.3	82.80
GMC	R/L	15767448-7	.3	91.50
2 **Bulb, Fog Lamp¶**	R/L	11516247	#.2	■24.30
#Included in R&R Fog Lamp Assy				
3 **Nut, Adjust¶**	R/L	10079160		.60
4 **Spring, Adjust¶**	R/L	16521608		3.60
5 **Retainer¶ (2/Side)**	R/L	16514113		.60
6 **Bolt, Adjust¶-Serviced w/Fog Lamp Assy**				
¶Included w/Fog Lamp Assy				

FOG LAMP CHEVROLET 2003

R&I Fog Lamp Assy ..... R/L .3

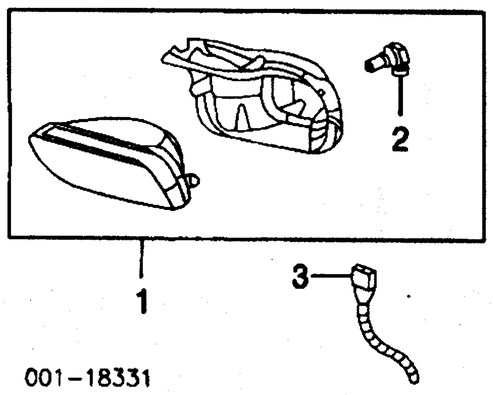

1 **Lamp Assy, Fog**	R/L	15077057-6	.3	91.50
2 **Bulb, Fog Lamp¶**	R/L	1999371	#.2	12.16
¶Included w/Fog Lamp Assy				
#Included in R&I Fog Lamp Assy				
3 **Socket, Fog Lamp**	R/L	12101898		23.43
Retainer, Fog Lamp (2/Side)	R/L	11518121		1.65

FOG LAMP GMC SIERRA 2003

R&I Fog Lamp Assy ..... R/L .3

Lamp Assy, Fog	R/L	15077059-8	.3	91.50
Bulb, Fog Lamp¶	R/L	9442876	#.2	■14.22
¶Included w/Fog Lamp Assy				
#Included in R&I Fog Lamp Assy				

FOG LAMP GMC SIERRA C3, SIERRA DENALI

R&I Fog Lamp Assy ..... R/L .3

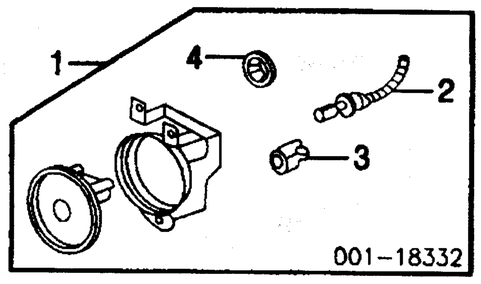

1 **Lamp Assy, Fog¶**	R/L	16516336-5	.3	83.80
¶Order by Application				
2 **Bulb & Socket, Fog Lamp¶**	R/L	9442876	#.2	■14.22
#Included in R&I Fog Lamp Assy				
3 **Nut, Adjust¶**	R/L	10079160		.60
4 **Retainer¶ (2/Side)**	R/L	14093869		.56
¶Included w/Fog Lamp Assy				

HOOD

Use Procedure Explanations 4 and 28 with the following text.

Refinish Hood Outside		3.1
Add for Underside		1.6
Refinish Hinge	R/L	.2
R&I Hood Assy		.4

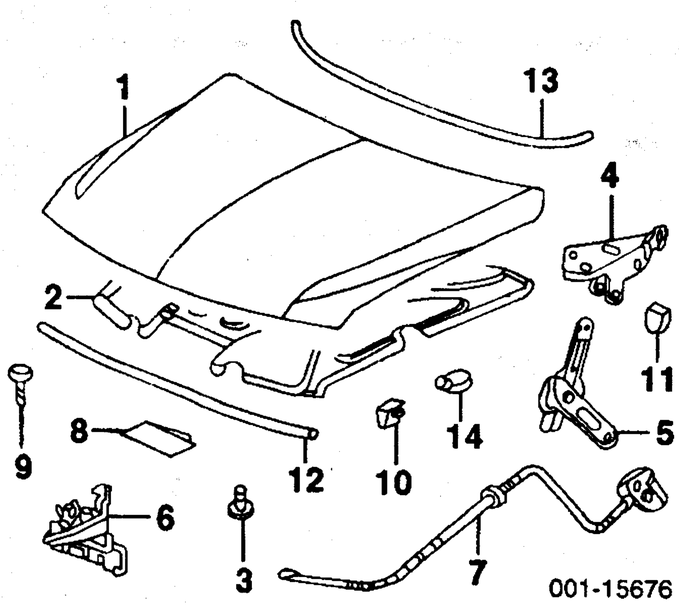

1 **Panel, Hood**				
Chevrolet				
1999-00		12477524	1.1	377.39
2001-02				
1500, 2500 Series		12477524	1.1	377.39
2500 HD, 3500 Series		15745931	1.1	429.46
2003		88944302	1.1	430.00
GMC	99-02	12477699	1.1	377.39
	03	N.A.	1.1	0.00
2 **Insulator**				
1999		15041971	.3	34.27
2000-02				
Chevrolet				
1500, 2500 Series		15164898	.3	44.54
2500 HD, 3500 Series		15058093	.3	34.27
GMC		15164898	.3	44.54
2003				
Chevrolet		15186204	.3	44.54
GMC		15186205	.3	44.54
3 **Retainer¶**		20064875		1.32
¶As Required				
4 **Hinge, Hood**	R/L	12472770-69	#.2	47.37
#w/Hood Panel Removed				
5 **Spring, Hood**	R/L	15035592-1	#.2	14.61
#w/Hinge Removed				
6 **Latch, Hood Primary**				
1999-02		15756432	.3	36.58
2003				
Chevrolet		15063821	.3	36.58
GMC		15756432	.3	36.58
7 **Cable, Hood Release**		15769724	.8	30.44
8 **Brace, Hood**		15097890		9.56
9 **Bumper, Hood Adjust**	R/L	15038411	.1	3.68
10 **Bumper, Side Hood**	R/L	15735963	.1	1.11
11 **Bumper, Rear Hood¶**		15033232	.1	3.68
¶As Required				
12 **Seal, Front Hood**		15068269	.1	16.88
13 **Seal, Rear Hood**		15706253	.1	17.30
14 **Lamp, Underhood**	99-02	12450086	.2	12.50
	03	N.A.	.2	0.00
Bulb, Underhood Lamp	99-02	9437173		■1.88
	03	N.A.		0.00

COOLING

Use Procedure Explanations 5 and 28 with the following text.

R&I Radiator		
Gas		
4.3L Eng, 4.8L Eng, 8.1L Eng		
Man Trans		.8
Auto Trans		1.0
5.3L Eng		1.0
6.0L Eng		
Man Trans		1.0
Auto Trans		
w/Eng Oil Cooler		1.2
w/o Eng Oil Cooler		1.0
Diesel		
Man Trans		1.6
Auto Trans		1.8
R&R Fan, Pulley & Clutch w/Radiator Removed		.2
Add to R&R Radiator Support		
To R&I/R&R Base Model Mechanical Components	m	#.3
#Includes R&I/R&R Front Sensor		
w/Aux Battery		#.4
#Includes R&I/R&R Battery		
w/ A/C	m	#.5
#Includes R&I/R&R A/C Condenser		
w/Auto Trans		.2
w/Diesel	m	#1.7
#Includes R&I/R&R Turbo Intercooler		
To Aim Lamps		.4
Evacuate & Recharge System	m	1.4
Recover Refrigerant	m	.3

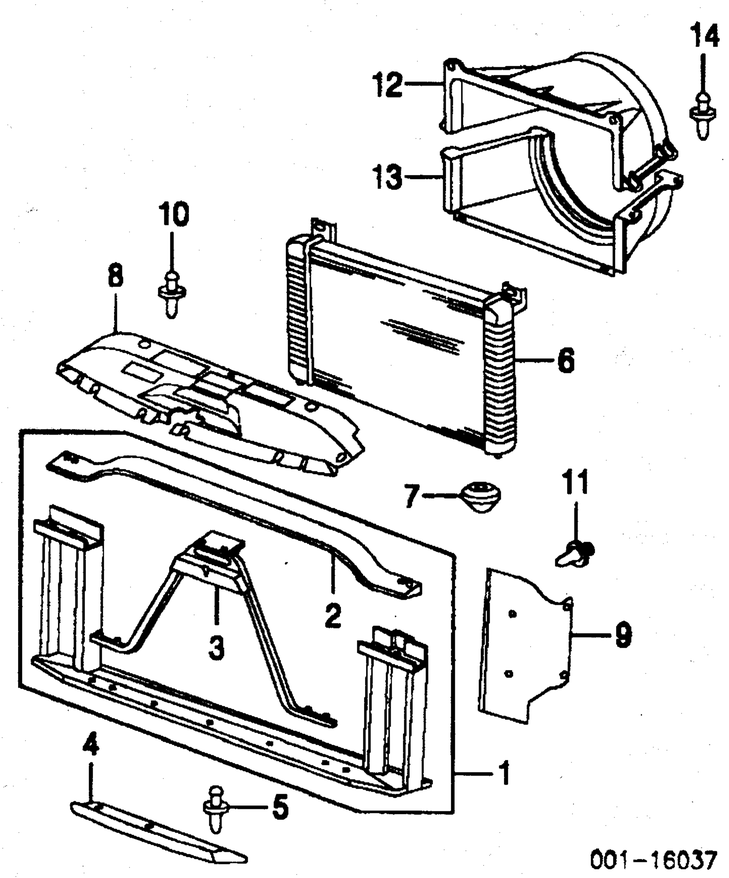

1 **Support Assy, Radiator**				
1999-02				
1500 Series				
1999-00		15074428	#6.1	388.98
2001-02				
Std Cab, Extended Cab		15074428	#6.1	388.98
Crew Cab		15074427	#6.1	388.98
2500, 3500 Series				
1999-00		15074427	#6.1	388.98
2001-02				
Gas				
6.0L Eng		15074427	#6.1	388.98
8.1L Eng		15074426	#6.1	388.98
Diesel		15074426	#6.1	388.98
2003				
1500 Series				
Std Cab, Extended Cab		15079105	#6.1	388.98
Crew Cab		15079104	#6.1	388.98
2500, 3500 Series		15079103	#6.1	388.98
#Includes R&I Grille, R&I/R&R Headlamp & Combination Lamp Assemblies, R&R Hood Primary Latch, Lower Support Baffle, Upper Deflector, Side Air Deflector, Radiator Surge Tank, UpperTie Bar, Latch Support Radiator, Battery, Clips & Fasteners, Disconnect & Connect Hood Cable & Wiring as Necessary				
2 **Bar, Upper Tie¶**				
1999-00				
1500 Series		15016840	#1.0	213.76
2500, 3500 Series				
Gas				
6.0L Eng		15016840	#1.0	213.76
8.1L Eng-Serviced w/Radiator Support Assy				
Diesel-Serviced w/Radiator Support Assy				
2001-03				
1500		15016840	#1.0	213.76
2500, 3500 Series				
6.0L Eng		15016840	#1.0	213.76
6.6L, 8.1L Eng		15016841	#1.0	213.76
3 **Support, Latch¶**				
1500 Series				
Std Cab, Extended Cab		15074429	#.5	77.29
Crew Cab		15074430	#.5	77.29
2500 Series	99-00	15744932	#.5	78.10
	01-03	15074430	#.5	77.29
3500 Series	01-03	15074430	#.5	77.29
¶Included w/Radiator Support Assy				
#w/Necessary Bolted Parts & Assemblies Removed				
4 **Baffle, Lower Support**				
1500 Series		15710140	.3	9.66
2500 Series	99-00	15710141	.3	9.66
	01-03	15767604	.3	8.95
3500 Series		15767604	.3	8.95
5 **Retainer, Baffle (3)**		15149708		3.86
6 **Radiator**				
Gas				
4.3L Eng				
Man Trans		52486601	.8	500.21
Auto Trans		52486600	1.0	360.39
4.8L Eng				
Man Trans		52486599	.8	360.39
Auto Trans		52486598	1.0	500.21
5.3L Eng		52486598	1.0	500.21
6.0L Eng				
Man Trans				
w/Eng Oil Cooler		52486596	1.0	500.21
w/o Eng Oil Cooler		52486597	1.0	385.64
Auto Trans				
w/Eng Oil Cooler		52487603	1.2	647.21
w/o Eng Oil Cooler		52487604	1.0	550.31
8.1L Eng				
Man Trans		15058683	.8	796.75
Auto Trans				
4 Speed (RPO-MT1)		15058684	1.0	817.17
5 Speed (RPO-M74)		15058682	1.0	1010.55
Diesel				
Man Trans		15768676	1.6	796.75
Auto Trans		15768217	1.8	796.75
7 **Mount, Lower Rad**				
Gas				
4.3L Eng	R/L	52486602		3.56
4.8L, 5.3L, 6.0L Eng	R/L	52486602		3.56
8.1L Eng	01-02 R/L	52487557		3.56
	03 R/L	52486602		3.56
Diesel	R/L	52486602		3.56
8 **Deflector, Upr Rad Air**				
1999-02		15081999	.1	32.54
2003				
Chevrolet		15077704	.1	16.27
GMC		15081999	.1	32.54
9 **Deflector, Side Rad Air**				
Gas				
4.3L, 4.8L, 5.3L Eng	R/L	15034806-5	#.1	6.61
6.0L Eng	99-00 R	15034816	#.1	10.47
	L	15004579	#.1	10.47
	01-03 R/L	15773378-7	#.1	3.76
#w/Grille or Radiator Removed				
10 **Retainer, Upr Defl (7)**		15969147		.56
11 **Retainer, Side Defl¶**		10121502		.28
¶As Required				
12 **Shroud, Upper**				
Gas				
4.3L Eng		15088329	#.3	38.71
4.8L, 5.3L Eng	99-01	15088327	#.3	27.49
	02-03	15088327	#.3	27.49
6.0L Eng				
1500, 2500 Series	99-01	15707521	#.3	37.64
	02-03	15088328	#.3	37.64
2500 HD, 3500 Series	99-01	15740070	#.3	37.64
	02-03	15088330	#.3	37.64
8.1L Eng	99-01	15023962	#.3	27.49
	02-03	15088325	#.3	27.49

COOLING Cont'd

Diesel	99-01	15020830	#.3	27.49
	02-03	15088324	#.3	27.49
13 Shroud, Lower				
Gas				
4.3L Eng		15707564	#.3	38.71
4.8L, 5.3L Eng		15707562	#.3	38.71
6.0L Eng				
1500, 2500 Series	99-01	15067753	#.3	38.71
	02-03	15164394	#.3	38.71
2500 HD, 3500 Series		15067754	#.3	38.03
8.1L Eng		15023965	#.3	38.71
Diesel	01	15020831	#.3	38.71
	02-03	15076210	#.3	38.71
#R&R Complete, w/Radiator Removed				
14 Retainer, Shroud (4)		5973400		1.12

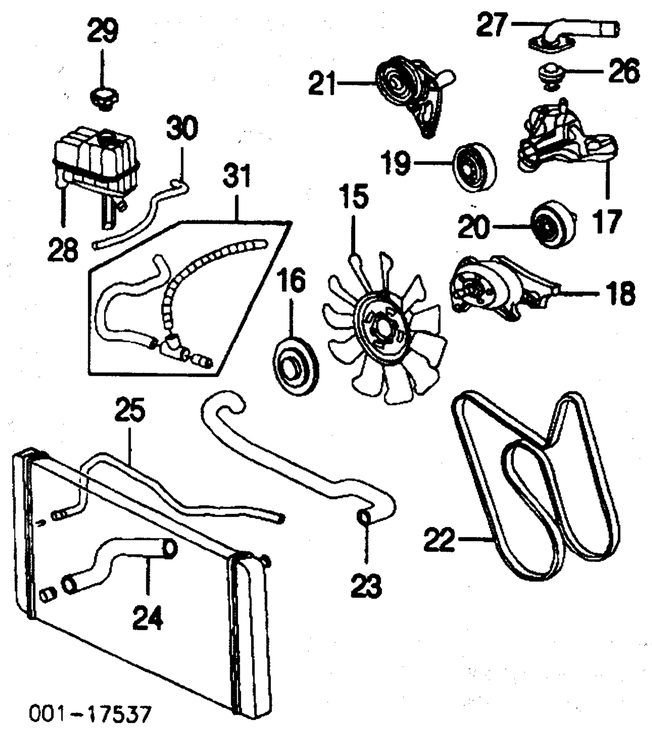

15 Blade, Fan				
Gas				
4.3L, 4.8L, 5.3L, 6.0L Eng		15017911	#.5	38.42
8.1L Eng		15767319	#.5	42.96
Diesel		15010202	#.8	51.68
16 Clutch, Fan				
Gas				
4.3L, 4.8L, 5.3L, 6.0L Eng¶		22149877	#.5	162.40
8.1L Eng				
Man Trans		15712914	#.5	146.16
Auto Trans				
4 Speed		15712914	#.5	146.16
5 Speed		15091842	#.5	146.16
Diesel		15001827	#.8	177.16
¶Order by Application				
#R&R Complete				
17 Pump, Water				
Gas				
4.3L Eng		12532528	m 1.2	■185.37
4.8L, 5.3L, 6.0L Eng		12458935	m 1.6	■181.29
8.1L Eng		88893906	m 1.6	■197.59
Diesel		97216136	m 2.0	■174.88
18 Pulley, Fan				
Diesel		97226289	#.8	490.26
#Included In R&R Fan Blade & Clutch				
19 Pulley, Fan/Pump				
Gas				
4.3L Eng		12550053	.5	7.95
4.8L, 5.3L, 6.0L Eng		12556733	.5	19.65
8.1L Eng		12550053	.5	7.95
20 Pulley, Idler				
Gas				
4.3L Eng				
w/ A/C		12555609	.5	34.58
w/o A/C		12556612	.5	34.58
4.8L, 5.3L, 6.0L, 8.1L Eng		12555609	.5	34.58
Diesel¶		14102597	.5	37.23
¶Order by Application				
21 Tensioner				
Gas				
4.3L Eng		12456152	.5	52.63
4.8L, 5.3L, 6.0L Eng		12554027	.5	52.63
8.1L Eng		12554701	.5	115.79
Diesel	01	97300857	.5	108.61
	02-03	97288625	.5	86.11
22 Belt, Drive				
Gas				
4.3L Eng				
w/ A/C		12569350	.3	■47.25
w/o A/C		12569349	.3	■47.25
4.8L, 5.3L, 6.0L Eng				
105 Amp Alt		12569347	.3	■47.25
130 Amp Alt		12569348	.3	■47.25
8.1L Eng				
w/ A/C		12569434	.3	■47.25
w/o A/C		12569433	.3	■47.25
Diesel¶	01	97223129	.3	■40.36
	02-03	97300657	.3	■55.02
¶Order by Application				
23 Hose, Upper Rad				
Gas				
4.3L Eng		15045472	#.6	■32.16
4.8L, 5.3L, 6.0L Eng		15076028	#.6	■44.08
8.1L Eng		15719226	#.6	■32.16
Diesel		15057411	#.6	■32.16
24 Hose, Lower Rad				
Gas				
4.3L Eng		15059572	#.7	■46.68
4.8L, 5.3L, 6.0L Eng		15769077	#.7	■26.28
8.1L Eng		15719228	#.7	■72.90
Diesel		15768215	#.7	■94.54
#R&R Both .8				
25 Hose, Rad Vent				
4.8L, 5.3L, 6.0L Eng		15020224	.3	■21.61
26 Thermostat				
Gas				
4.3L Eng		12563335	#.9	■11.47
4.8L, 5.3L, 6.0L Eng-Serviced w/Thermostat Housing				
8.1L Eng		12559575	#.9	■11.89
Diesel				
Front		97241129	#1.1	■11.26
Rear		97241130	#1.1	■11.26
27 Housing, Thermostat				
Gas				
4.3L Eng		12557563	#.9	27.42
4.8L, 5.3L, 6.0L Eng		12571261	#.9	19.47
8.1L Eng		12559861	#.9	24.98
Diesel		97222428	#1.1	113.19
Cover, Thermostat Housing				
Diesel		97225886	#1.1	41.69
#R&R Complete				
28 Tank, Rad Surge				
Gas				
4.3L, 4.8L, 5.3L, 6.0L Eng¶	99-02	15085724	.5	45.96
	03	15046661	.5	39.88
8.1L Eng		15046661	.5	39.88
Diesel		15085725	.5	56.00
¶Order by Application				
29 Cap, Surge Tank		22652695		■9.65
30 Hose, Surge Tank Inlet				
Gas	99-00	15734738	.2	■15.68
	01-03	15170551	.2	■15.68
Diesel		15023969	.2	■15.68
31 Hose, Surge Tank Outlet¶		15059576		■36.62
¶Order by Application				

ENGINE OIL COOLER

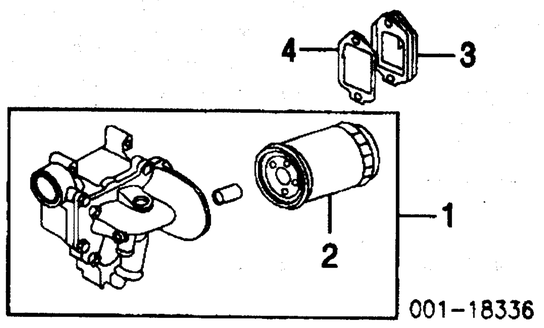

1 Cooler Assy, Engine Oil				
6.6L Eng		97262115	m #1.2	251.91
2 Filter, Oil¶				
ACDelco Brand		88917036	m	■0.00
Isuzu Brand		97214983	m	■0.00
¶Included w/Engine Oil Cooler Assy				
3 Adapter, Oil Cooler		97941206	m #1.2	120.79
4 Gasket, Adapter		97192666	m #1.2	20.79
#R&R Complete				

A/C REFRIGERANT CAPACITIES

A/C R-134a Refrigerant Capacity
1999-00: 32 Ozs (2.0 Lbs)
2001-03: 28.8 Ozs (1.8 Lbs)

A/C /HEATER/VENTILATION

Use Procedure Explanation 6 with the following text.

R&I Condenser	m	1.0
Evacuate & Recharge System	m	1.4
Recover Refrigerant	m	.3

Illustration Located in Next Column

1 Condenser				
1500, 2500 Series		52487303	m 1.0	■343.07
3500 Series				
w/Ambulance Pkg		52475996	m 1.0	■222.30
w/o Ambulance Pkg		52487303	m 1.0	■343.07
2 Insulator, Condenser				
Gas	R/L	15012544		3.81
Diesel	R/L	15044225		4.28
3 Compressor Assy				
Gas				
4.3L Eng	99-00	1136606	m .5	■666.53
	01-02	1136643	m .5	■575.00
	03	15080961	m .5	■598.80
4.8L, 5.3L, 6.0L Eng				
1999		1136642	m #1.0	■666.53
2000				
Denso Brand		15036042	m #1.0	■518.68
FWI/GMC		1136642	m #1.0	■666.53
2001-02		15036042	m #1.0	■518.68

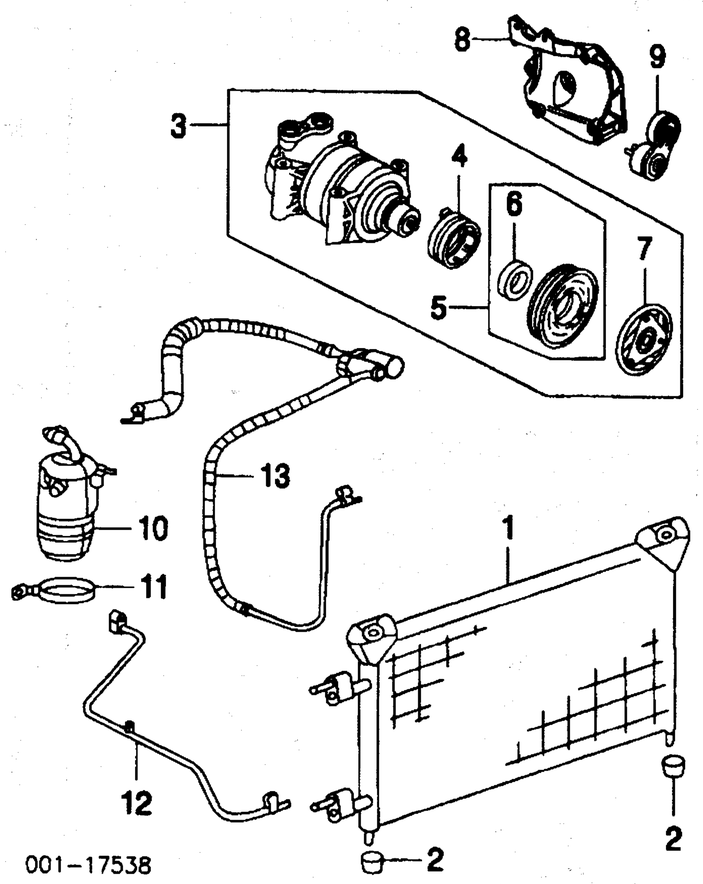

2003		15068853	m #1.0	■598.80
8.1L Eng				
2001-02				
Delphi Brand		1136642	m #1.0	■666.53
Denso Brand		15036042	m #1.0	■518.68
2003		15068853	m #1.0	■598.80
#w/4 WD Add .6				
Diesel				
2500 Series	99-02	1136643	m .6	■575.00
	03	15080961	m .6	■598.80
3500 Series				
w/Ambulance Pkg	99-02	15707612	m .6	■701.16
	03	15068855	m .6	0.00
w/o Ambulance Pkg	99-02	1136643	m .6	■575.00
	03	15080961	m .6	■598.80
4 Coil¶				
1999-00				
4.3L Eng		6580792	m #.9	75.11
4.8L, 5.3L, 6.0L Eng		6581375	m #1.4	112.68
2001-02		6581632	m #1.4	65.99
5 Pulley Assy¶				
Gas				
4.3L Eng	99-00	6580037	m #.9	165.46
	01-02	6581796	m #.9	159.61
	03	N.A.	m #.9	0.00
4.8L, 5.3L, 6.0L Eng	99-00	6581371	m #1.4	63.69
	01-02	6581798	m #1.4	162.66
	03	N.A.	m #1.4	0.00
8.1L Eng		6581798	m #1.4	162.66
Diesel		6581796	m 1.0	159.61
6 Bearing¶ (a)	99-00	6559469	m	33.00
(a) Included w/Pulley Assy				
7 Clutch¶				
1999-00				
4.3L Eng		6581043	m #.9	65.99
4.8L, 5.3L, 6.0L Eng		6581376	m #1.4	87.29
2001-02		6581822	m #1.4	77.90
2003 (a)		88891576		195.14
¶Included w/Compressor Assy				
(a) Order by Application				
#R&R Complete, w/4 WD Add .6				
8 Bracket, Compressor				
Gas				
4.3L Eng¶-See Steering Pump Section				
4.8L, 5.3L, 6.0L Eng		12554026	#.4	19.07
8.1L Eng		12570220	#.4	58.07
Diesel		97222521	#.4	106.54
¶Serviced w/Steering Pump Bracket				
#w/Compressor Removed				
9 Tensioner, A/C Belt				
Gas				
4.8L, 5.3L, 6.0L Eng		12565372	m .6	41.26
8.1L Eng		12554700	m .6	45.28
Belt, A/C				
Gas				
4.8L, 5.3L, 6.0L Eng		12569346	.5	■19.15
8.1L Eng		12569437	.5	■19.15
10 Receiver/Drier				
Gas				
4.3L Eng		2724985	m .5	■122.83
4.8L, 5.3L, 6.0L, 8.1L Eng		2724986	m .5	■122.83
Diesel				
2500 Series	01	2724985	m .5	■122.83
	02-03	1132788	m .5	■89.08
3500 Series				
w/Ambulance Pkg	01	1132753	m .5	■121.06
	02-03	1132787	m .5	■92.14
w/o Ambulance Pkg	01	2724985	m .5	■122.83
	02-03	1132788	m .5	■89.08
11 Bracket, Receiver/Drier	99-02	2724987		13.44
	03	6560422		13.44
12 Tube, Evap/Condenser				
Gas		15038861	m .4	44.42
Diesel				
2500 Series		15035976	m .4	■77.62

Labor Times Shown are for Replacement with New OEM Undamaged Parts on New Undamaged Vehicles.
Comments or suggestions? Need assistance? Call 1-800-854-7030 or 858-578-6550. Ext. 8220. Fax 1-888-256-7969 or 858-549-0629.

3500 Series					
w/Ambulance Pkg	01-02	15704781	m	.4	■116.12
	03	15065223	m	.4	■144.92
w/o Ambulance Pkg	01-02	15035976	m	.4	■77.62
	03	15065222	m	.4	■50.64
13 Hose w/Fitting, Comp¶					
1999-02					
Gas					
4.3L Eng		15050462	m	.6	■215.18
4.8L, 5.3L, 6.0L Eng					
1999-01		15050461	m	.6	■209.09
2002-03-Serviced by Components					
8.1L Eng					
2001		15708738	m	.6	■209.09
2002-03-Serviced by Components					
Diesel	01	15024546	m	.6	■181.94
	02	15092347	m	.6	■172.66
	03	N.A.	m	.6	0.00
¶Order by Application					
Hose, Receiver/Drier/Compressor					
Gas					
4.8L, 5.3L, 6.0L, 8.1L Eng	02-03	15708733	m	.4	■94.41
Hose, Compressor/Condenser					
1500, 2500 Series					
Gas					
4.8L, 5.3L, 6.0L Eng	02-03	15036043	m	.6	■95.17
2500 HD, 3500 Series					
Gas					
6.0L Eng	02-03	15083100	m	.6	■61.20
8.1L Eng	02-03	15037101	m	.6	■86.67

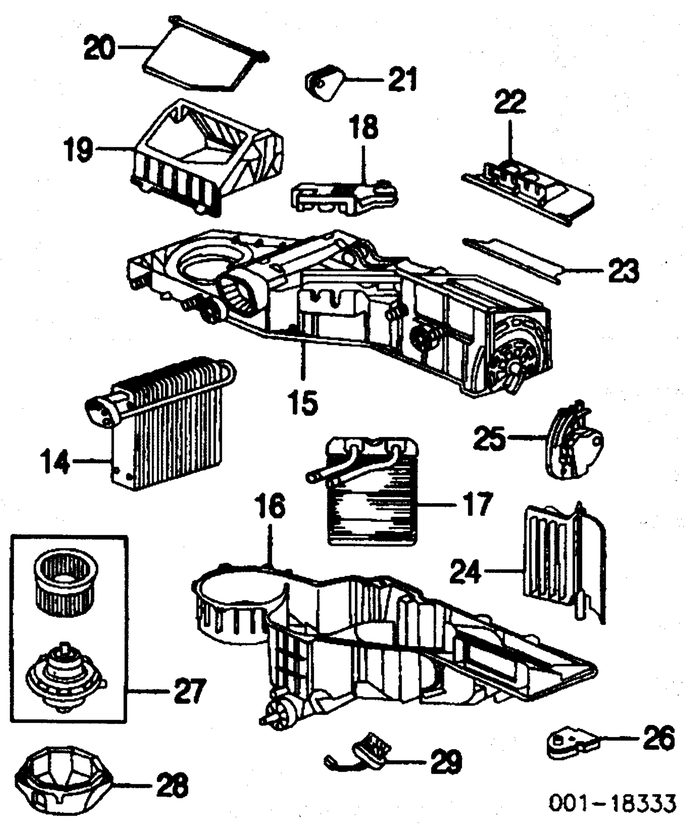

14 Core, Evaporator	99-02	52494294	m	#5.1	■202.00
	03	88986628	m	#5.1	0.00
#Includes R&I Instrument Panel					
15 Case, Upper	99-02	52474944	m	#5.6	27.42
	03	88986521	m	#5.6	0.00
16 Case, Lower	99-02	52474945	m	#5.6	25.60
	03	88986526	m	#5.6	0.00
#R&R Complete, Includes R&I Instrument Panel & R&I/R&R Heater & Evaporator Core if Equipped					
17 Core, Heater					
w/ A/C	99-02	52473322	m	#5.6	122.83
	03	88986627	m	#5.6	159.14
w/o A/C	99-02	52473322	m	#5.1	122.83
	03	88986627	m	#5.1	159.14
#Includes R&I Instrument Panel					
18 Cover, Heater Core	99-02	52474914	m		12.82
	03	88986551	m		32.37
19 Case, Air Inlet	99-02	52474965	m		9.88
	03	88986555	m		0.00
20 Valve, Air Inlet	99-02	52473330	m		19.42
	03	88986540	m		0.00
21 Actuator, Air Inlet		52474795	m		51.27
22 Valve, Mode		52474959	m		12.70
23 Valve, Defroster	99-02	52474961	m		12.09
	03	88986536	m		0.00
24 Valve, Temp		52474973	m		19.91
25 Actuator, Mode Valve		52473356	m		59.39
26 Actuator, Temp Valve	99-02	52474810	m		55.84
	03	16163982	m		137.05
27 Motor, Blower					
w/ A/C	99-02	52484829	m	.8	0.00
	03	88986556	m	.8	■174.68
w/o A/C	99-02	52484829	m	1.1	0.00
	03	88986556	m	1.1	■174.68
28 Cover, Blower Motor	99-02	52473346			9.70
	03	N.A.			0.00
29 Resistor, Blower Motor		15305077	m		18.42

FRONT FENDER

Use Procedure Explanations 7 and 28 with the following text.

Refinish Fender Outside	R/L	2.0
Add for Edge & Inside	R/L	1.2
Refinish Fender Flare	R/L	.6
R&I Fender Assy	R	#1.5
	L	#2.0
#Includes R&I Grille, Left Side Includes R&I/R&R Battery		
Add to R&I Fender		
w/Aux Battery		#.4
#Includes R&I/R&R Battery		
R&I Fender Flare	R/L	.3
Add to R&R Fender		
To Drill Holes for & Install Flare	R/L	.5
w/Aux Battery		#.4
#Includes R&I/R&R Battery		

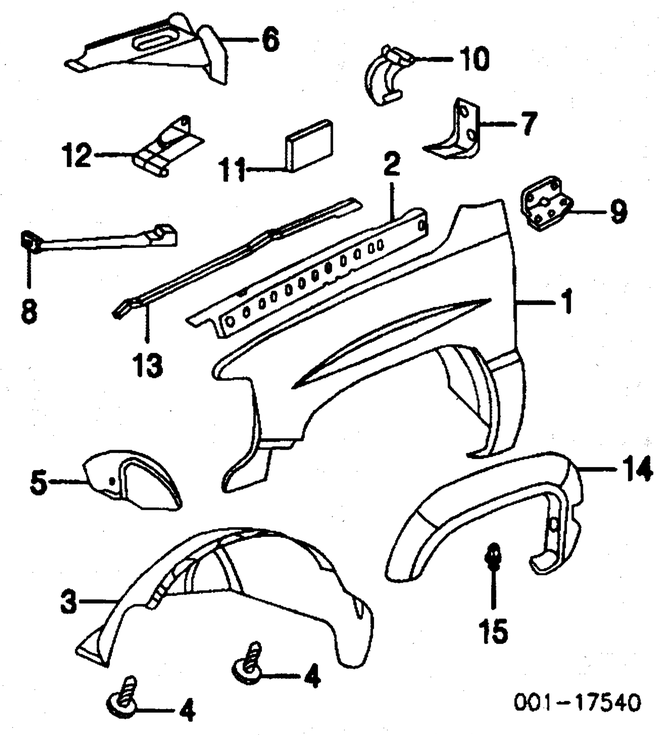

1 Fender					
Chevrolet	99-02	R 12476220		#1.7	210.00
		L 12479757		#2.2	210.00
	03	R 88944419		#1.7	210.00
		L 88944420		#2.2	210.00
GMC	99-02	R 12476222		#1.7	210.00
		L 12479759		#2.2	210.00
	03	R 88944418		#1.7	210.00
		L 88944417		#2.2	210.00
#Includes R&I Grille, Left Side Includes R&I/R&R Battery					
2 Reinf, Upper Fender		R/L 15045232-1			13.12
3 Liner, Fender					
1500 Series					
2WD	99-02	R/L 15075122-1		.3	33.97
	03	R 15184323		.3	33.97
		L 15186612		.3	0.00
4WD					
Chevrolet	99-02	R/L 15075122-1		.3	33.97
	03	R 15184323		.3	33.97
		L 15186612		.3	0.00
GMC					
Sierra	99-02	R/L 15075122-1		.3	33.97
Sierra C3, Sierra Denali	99-02	R 15057726		.3	33.97
		L 15095670		.3	33.97
	03	R 15184324		.3	33.97
		L 15186612		.3	0.00
2500 Series	99-02	R/L 15075122-1		.3	33.97
	03	R 15184323		.3	33.97
		L 15186612		.3	0.00
2500 HD, 3500 Series	99-02	R/L 15095666-7		.3	33.97
	03	R 15181627		.3	0.00
		L 15186213		.3	0.00
4 Retainer, Fender Liner¶		R/L 15969147			.56
¶As Required					
Bracket, Fender Apron		R 15159508		.2	14.75
		L 15159507		.2	4.27
5 Insulator, Lower Fender Apron					
2500 Series					
2WD	99	R 15739486		.1	50.85
4WD	99	R 15000281		.1	30.31
6 Bracket, Right Fender Apron		15159508			14.75
7 Bracket, Left Fender Apron		15159507			4.27
8 Brace, Fender		L 15159505		.2	4.68
9 Bracket, Rear Upr Fender		R/L 15042440-1		.1	7.32
10 Brace, Rear Upr Fender		R 15709454		.1	9.86
		L 15709453		.1	11.49
11 Stiffener, Fender Reinf	99-02	R/L 15043382			8.03
	03	R/L N.A.			0.00
12 Support, Fender Apron		R 15705122			5.59
13 Strip, Fender Bond		R/L 15762820-19			7.63
14 Flare, Fender					
1999-02					
Smooth Finish					
Black		R/L 15054632-1		.3	190.78
Paint to Match		R/L 15054632-1		.3	190.78
Textured Finish					
Black		R 15750000		.3	190.78
		L 15749999		.3	190.78
Paint to Match		R 15750000		.3	190.78
		L 15749999		.3	190.78
2003¶		R/L 15062984-5		.3	190.78
¶Order by Application					
15 Retainer, Flare (Push-On)					
(5/Side)		R/L 15149708			3.86

UNDERHOOD DIMENSIONS

1999-02

061-10049

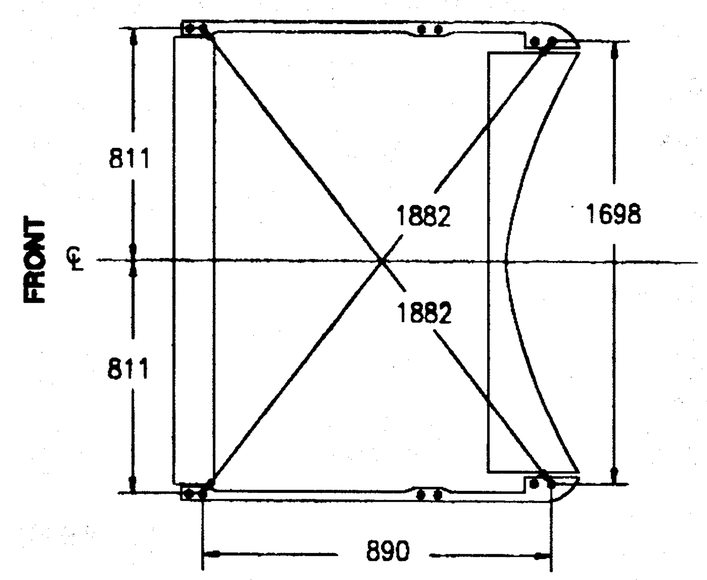

2003

Information not available at time of publication.

AIR BAG SYSTEM

NOTE 1: R&R Does Not Include disable and enable or diagnose Air Bag System.

NOTE 2: Refer to Procedural Explanation 30 for Supplemental Restraint/Air Bag System Component Inspection and Replacement Information.

NOTE 3: Instrument Panel Support must be replaced if the Steering Column Capsules have released or Column has collapsed, steel Knee Bolster Brackets are bent or parts which attach to the magnesium support do not fit.

NOTE 4: For Air Bag System Service Procedures, refer to Manufacturer's Service Repair Manual or Mitchell's Air Bag Service and Repair Manual.

FRONT

Disable & Enable Air Bag System	m	.5
Diagnose Air Bag System (If Required)	m	#.5
#Includes Disconnect & Connect Scan Tool & Retrieve/Clear Trouble Codes		

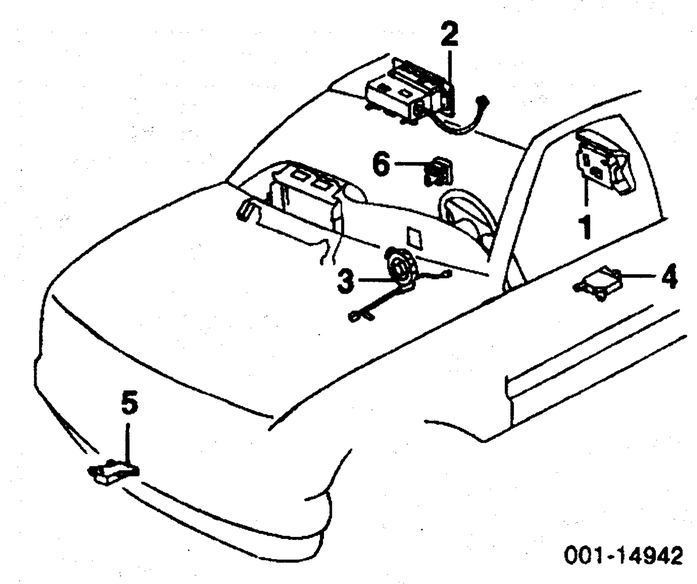

1 Module, Driver Air Bag					
Chevrolet					
1999		12479714	m	#.4	650.20
2000-02		15767245	m	#.4	650.20
2003					
1500, 2500 Series					
Std Cab, Extended Cab		15095374	m	#.4	650.20
Crew Cab		15095382	m	#.4	650.20
2500 HD, 3500 Series		15095382	m	#.4	650.20
GMC					
1999-02					
Sierra	99	12479715	m	#.4	650.20
	00-02	15071133	m	#.4	650.20
Sierra C3, Sierra Denali					
Neutral	99-02	15767305	m	#.4	650.20
Pewter	99-02	15071135	m	#.4	650.20
2003					
Sierra					
1500, 2500 Series					
Std Cab, Extended Cab		15095378	m	#.4	650.20
Crew Cab		15095383	m	#.4	650.20
2500 HD, 3500 Series		15095383	m	#.4	650.20
Sierra Denali					
Neutral		15095377	m	#.4	650.20
Pewter		15095376	m	#.4	650.20

AIR BAG SYSTEM Cont'd

FRONT Cont'd

#Included in R&R Steering Wheel

2 Module, Pass Air Bag					
1999-02					
Blue	99	16757761	m	1.6	650.20
Graphite	99	16757762	m	1.6	650.20
	00-02	16822834	m	1.6	650.20
Oak	99	16757764	m	1.6	650.20
	00	16822836	m	1.6	650.20
Neutral	01-02	15051340	m	1.6	650.20
Pewter	99	16757763	m	1.6	650.20
	00-02	16822835	m	1.6	650.20
Shale	02	15768457	m	1.6	650.20
2003					
Neutral					
1500, 2500 Series					
Std Cab, Extended Cab		15182350	m	1.6	650.20
Crew Cab		15051340	m	1.6	650.20
2500 HD, 3500 Series		15051340	m	1.6	650.20
Pewter					
1500, 2500 Series					
Std Cab, Extended Cab		15182351	m	1.6	650.20
Crew Cab		15087029	m	1.6	650.20
2500 HD, 3500 Series					
RPO-69I		15087029	m	1.6	650.20
RPO-92I		16822835	m	1.6	650.20
3 Coil, SIR¶-See Steering Wheel/Column Section					
¶Included w/Column Assy					
4 SDM Unit					
1999		9378255	m	.9	268.00
2000		12210099	m	.9	268.00
2001-02					
Std Cab, Extended Cab					
1500, 2500 Series		12210099	m	.9	268.00
2500 HD, 3500 Series		12210109	m	.9	268.00
Crew Cab	01	12201100	m	.9	268.00
	02	12210119	m	.9	268.00
2003					
1500, 2500 Series					
Std Cab, Extended Cab		12220290	m	.9	268.00
Crew Cab		12220300	m	.9	268.00
2500 HD Series		12220280	m	.9	268.00
3500 Series					
Std Cab, Extended Cab		12220280	m	.9	268.00
Crew Cab		12220300	m	.9	268.00
5 Sensor, Front					
1500, 2500 Series					
Std Cab, Extended Cab	99-02	16246305	m	.6	44.75
	03	15057506	m	.6	0.00
Crew Cab	01-02	15070580	m	.6	44.75
	03	15057507	m	.6	64.56
2500 HD, 3500 Series	01-02	15070580	m	.6	44.75
	03	15057507	m	.6	64.56
6 Switch, Deactivation					
1999		15036140	m	.4	61.35
2000		88895089	m	.4	130.00
2001-02¶		88895090	m	.4	130.00
2003		15177170	m	.4	42.11
¶Order by Application					

SIDE

Disable & Enable Air Bag System		m	.5	
Diagnose Air Bag System (If Required)		m	#.5	
#Includes Disconnect & Connect Scan Tool & Retrieve/Clear Trouble Codes				
Module, Side Air Bag	R 88982048	m	#.5	0.00
Sensor, Side Air Bag	R 88982093	m	#.4	123.68
#w/Front Seat Removed				

ABS/BRAKES

Bleed Brake System	m	1.0	

NOTE: R&R Does Not include bleed brake system.

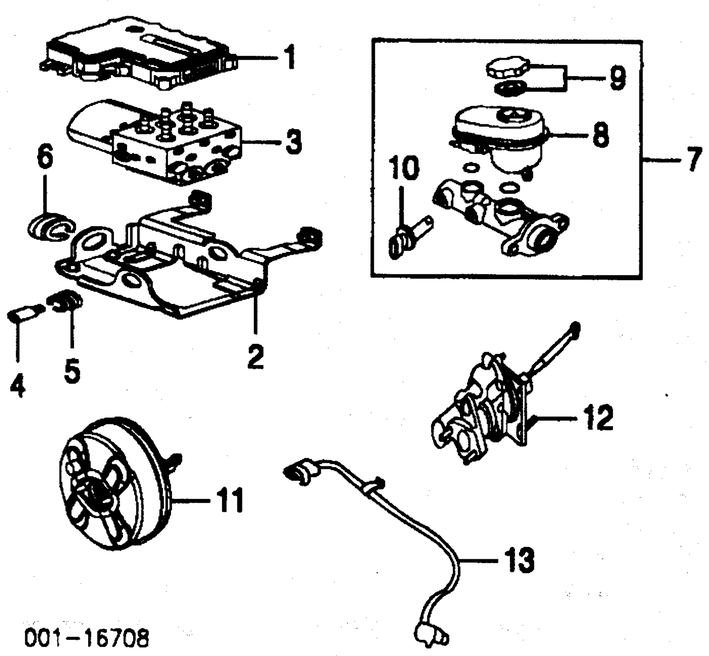

1 Module, Brake Control					
1500 Series					
1999-00		88982286	m	#.6	772.50
2001-02					
Std Cab, Extended Cab					
w/Traction Control		88935641	m	#.6	751.00
w/o Traction Control					
Silverado, Sierra		88982286	m	#.6	772.50
Sierra C3, Sierra Denali		88948555	m	#.6	700.13
Crew Cab		88982288	m	#.6	773.54
2003					
2WD					
Std Cab		88982322	m	#.6	0.00
Extended Cab					
w/Traction Control		88982316	m	#.6	0.00
w/o Traction Control		88982305	m	#.6	711.00
4WD					
w/4WS		88982320	m	.6	0.00
w/o 4WS		88982305	m	#.6	711.00
Crew Cab		88982315	m	#.6	0.00
2500 Series					
1999-00		88982288	m	#.6	773.54
2001-02					
w/Traction Control		88935637	m	#.6	658.95
w/o Traction Control		88982288	m	#.6	773.54
2003					
w/Traction Control		15063048	m	#.6	751.00
w/o Traction Control		15085915	m	#.6	0.00
2500 HD Series		88935867	m	#.6	773.54
	03	15085915	m	#.6	0.00
3500 Series	01-02	88935868	m	#.6	0.00
	03	15085915	m	#.6	0.00
#Included in R&R Module Valve					
2 Brkt, Brake Cont Module		12472990			25.86
3 Valve, Module					
1999-00		88935847	m	1.2	614.28
2001-02					
1500, 2500 Series		88935847	m	1.2	614.28
2500 HD, 3500 Series		88935864	m	1.2	538.65
2003					
1500 Series					
Std Cab, Extended Cab		88982306	m	1.2	0.00
Crew Cab					
w/Traction Control		88982306	m	1.2	0.00
w/o Traction Control		88982308	m	1.2	0.00
2500 Series		88982308	m	1.2	0.00
2500 HD, 3500 Series		25744426	m	1.2	700.13
4 Bolt, Module	R/L	12473003			3.68
5 Bushing, 27.9mm	R/L	12473002			.81
6 Bushing, 34.7mm		12389626			8.21
7 Cylinder Assy, Brake Master					
1500 Series					
1999-02		18060789	m	.7	197.00
2003					
Std Cab, Extended Cab		18047527	m	.7	150.00
Crew Cab		18047512	m	.7	0.00
2500 Series	99-02	18043278	m	.7	197.00
	03	18047512	m	.7	0.00
3500 Series	01-02	18043278	m	.7	197.00
	03	18047512	m	.7	0.00
8 Reservoir¶					
1500 Series					
1999-02		18040254	m	.4	35.26
2003					
Std Cab, Extended Cab		18047528	m	.4	0.00
Crew Cab					
2500, 3500	99-02	18060798	m	.4	35.26
	03	18047515	m	.4	0.00
9 Cap¶	99-02	18060186	m	.4	21.96
	03	18060795	m	.4	21.96
10 Sensor, Fluid Level¶		18029973	m	.4	9.88
¶Included w/Brake Master Cylinder Assy					
11 Booster, Vacuum Brake	99-02	18042073	m	#1.3	334.00
	02	18060777	m	#1.3	344.02
	03	18047186	m	#1.3	0.00
12 Booster, Hydraulic Brake	99-02	15757280	m	#1.3	521.00
	03	15183760	m	#1.3	521.00
#Includes R&R Brake Master Cylinder					
13 Sensor, Front ABS-See Front Suspension Section					

CRUISE CONTROL SYSTEM

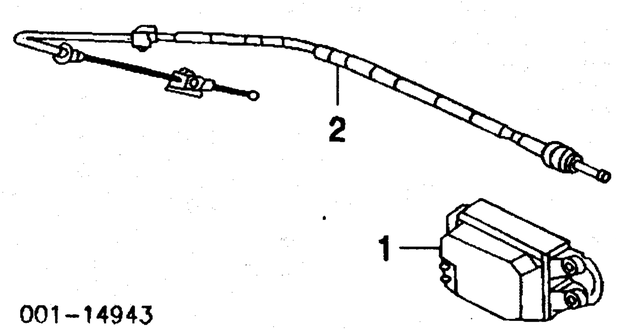

1 Module, Cruise Cont	99-02	25315559	m	#.5	463.84
	03	15759192	m	#.5	416.54
2 Cable, Cruise Cont					
Gas					
4.3L Eng	99	15712336	m	#.5	17.23
	00-03	15040831	m	#.5	18.18
4.8L, 5.3L, 6.0L Eng	99	15712334	m	#.5	18.28
	00-02	15040802	m	#.5	36.21
	03	N.A.	m	#.5	0.00
8.1L Eng		N.A.	m	#.5	0.00
Diesel		N.A.	m	#.5	0.00
#R&R Complete					

FRAME

Use Procedure Explanation 9 with the following text.

2WD

Add to R&R Frame		
w/4.3L Eng	m	.4
w/4.8L, 5.3L, 6.0L, 8.1L Eng		
Man Trans	m	.3
Auto Trans	m	.6
w/6.6L Eng		
Auto Trans	m	.8
To Transfer Front Spring Hanger		1.5
To Transfer Radiator Support Mtg Brackets		1.5
w/ A/C	m	.6
w/4WS	m	.8
w/Cruise Control	m	.2

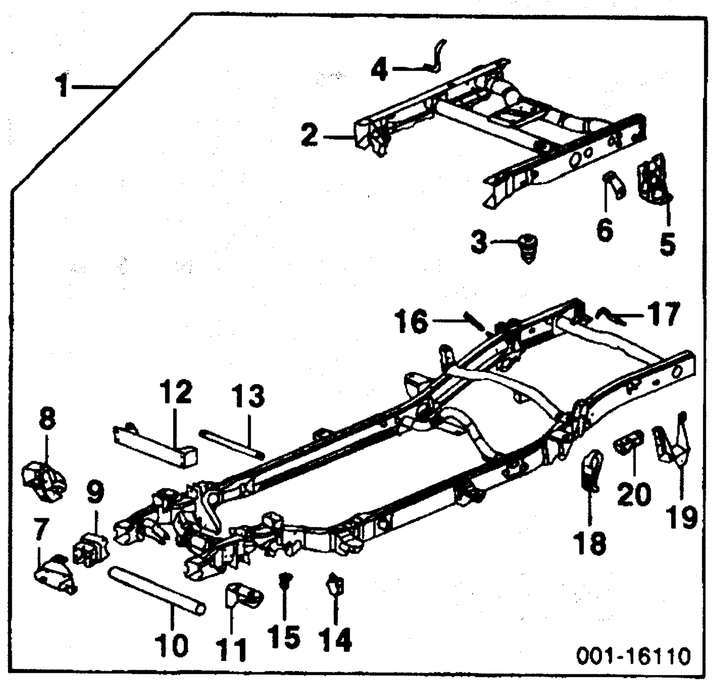

1 Frame Assy				
Std Cab				
1500 Series				
6-1/2 Foot Bed	99-02	15063950	24.5	2569.42
	03	15065902	24.5	1813.56
8 Foot Bed	99-02	15063952	24.5	1913.49
	03	15065904	24.5	2033.90
2500 Series	99-02	15063957	24.5	2613.86
	03	15068838	24.5	2288.14
2500 HD Series	01-02	15753449	24.5	2158.78
	03	15065912	24.5	2033.90
3500 Series¶	01-02	15753449	24.5	2158.78
	03	N.A.	24.5	0.00
Extended Cab				
1500 Series				
6-1/2 Foot Bed				
1999-01		15761853	27.5	1874.64
2002-03				
w/4WS	02	15163230	27.5	1874.64
	03	15166381	27.5	2033.90
w/o 4WS	02	15063951	27.5	1874.64
	03	15065903	27.5	2033.90
8 Foot Bed	99-02	15063953	27.5	2569.42
	03	15065905	27.5	2033.90
2500 Series				
6-1/2 Foot Bed	99-00	15706914	27.5	2376.92
	01-02	15753448	27.5	2212.27
	03	15065911	27.5	2288.14
8 Foot Bed	99-00	15706913	27.5	2376.92
	01-02	15753451	27.5	2247.97
	03	15065914	27.5	2288.14
3500 Series¶	01-02	15753451	27.5	2247.97
	03	15065914	27.5	2288.14
Crew Cab				
1500 Series	01-02	15063959	28.5	2613.86
	03	15069449	28.5	2525.42
2500 Series				
6-1/2 Foot Bed	01-02	15753447	28.5	2139.97
	03	15065910	28.5	2288.14
8 Foot Bed	01-02	15753450	28.5	2261.59
	03	15065913	28.5	2288.14
3500 Series¶	01-02	15753450	28.5	2261.59
	03	15065913	28.5	2288.14
¶Order by Application				
2 Frame, Rear Half¶				
Std Cab, Extended Cab				
1500 Series				
6-1/2 Foot Bed	99-01	12479880	#11.5	482.34
	02-03	88938453	#11.5	510.61
8 Foot Bed	99-01	12479881	#11.5	482.34
	02-03	88938454	#11.5	510.61
2500 Series				
6-1/2 Foot Bed	99-00	12475257	#11.5	510.61
	01-03	12479977	#11.5	918.51
8 Foot Bed	99-01	12475258	#11.5	510.61
	02-03	88938456	#11.5	510.61
2500 HD Series		12479978	#11.5	918.51
3500 Series		12479978	#11.5	918.51
Crew Cab				
1500 Series		88938455	#11.5	510.61
2500 Series				
6-1/2 Foot Bed		12479977	#11.5	918.51
8 Foot Bed		12479978	#11.5	918.51
3500 Series		12479978	#11.5	918.51
#w/Bed Assy Removed				
3 Bumper, Rear Axle¶				
Std Cab, Extended Cab				
1500 Series	R/L	15712438		14.75

Labor Times Shown are for Replacement with New OEM Undamaged Parts on New Undamaged Vehicles.
Comments or suggestions? Need assistance? Call 1-800-854-7030 or 858-578-6550. Ext. 8220. Fax 1-888-256-7969 or 858-549-0629.

2500, 3500 Series	R/L	N.A.		0.00
Crew Cab-Serviced w/Frame Assy				
4 **Hanger, Muffler¶**				
Std Cab, Extended Cab		15740774		3.89
Crew Cab-Serviced w/Frame Assy				
5 **Hanger Kit, Rear Spring¶**				
Std Cab, Extended Cab				
1500 Series	R/L	12474021	2.0	129.47
2500 Series	R/L	12474459	2.0	129.47
2500 HD Series	R/L	15004157	2.0	62.32
3500 Series-Serviced w/Frame Assy				
Crew Cab-Serviced w/Frame Assy				
6 **Reinf Kit, Rear Spring Hanger¶**				
Std Cab, Extended Cab				
1500 Series	R/L	12474022		52.54
Crew Cab-Serviced w/Frame Assy				
Bracket Kit, Impact Bar¶				
7 1500 Series-See Front Bumper Section				
8 2500, 3500 Series-See Front Bumper Section				
9 **Cap, Frame Extension¶**				
Std Cab, Extended Cab	R/L	12475402-1	#5.5	204.41
#Includes R&R Impact Bar Bracket Kit & Rad Support Bracket				
Crew Cab-Serviced w/Frame Assy				
10 **Xmbr, Front¶ (a)**				
1500 Series				
Std Cab, Extended Cab		15716565	#3.0	57.15
Crew Cab-Serviced w/Frame Assy				
2500 Series				
Std Cab		15716565	#3.0	57.15
Extended Cab		15719509	#3.0	57.15
Crew Cab-Serviced w/Frame Assy				
3500 Series				
Std Cab		15719509	#3.0	57.15
Extended Cab, Crew Cab-Serviced w/Frame Assy				
#Deduct 1.5 w/Each Frame Extension Cap Removed				
(a) Order by Application				
11 **Bracket, Rad Support¶**				
Std Cab, Extended Cab 99-00	R	12477747	2.0	66.00
	L	12475218	2.0	66.00
01-03	R/L	12479976-5	2.0	76.27
Crew Cab-Serviced w/Frame Assy				
Brace, Control Arm¶				
12 1500 Series				
Std Cab, Extended Cab		12479997		108.51
Crew Cab-Serviced w/Frame Assy				
13 2500 Series				
Std Cab, Extended Cab		12474451		108.51
Crew Cab-Serviced w/Frame Assy				
Bumper Kit, Control Arm¶				
14 1500 Series				
Std Cab, Extended Cab		12474008		9.88
Crew Cab-Serviced w/Frame Assy				
15 2500, 3500 Series				
Std Cab, Extended Cab		N.A.		0.00
Crew Cab-Serviced w/Frame Assy				
16 **Hanger, Front Exhaust Pipe¶**				
Std Cab, Extended Cab		15152622		3.89
Crew Cab-Serviced w/Frame Assy				
17 **Hanger, Rear Exhaust Pipe¶**				
Std Cab, Extended Cab		15740773		3.89
Crew Cab-Serviced w/Frame Assy				
18 **Brkt, Park Brake Cable¶**				
Std Cab, Extended Cab	R/L	15159478	1.5	31.30
Crew Cab-Serviced w/Frame Assy				
19 **Hanger Kit, Rear Spring¶**				
Std Cab, Extended Cab				
1500 Series				
6-1/2 Foot Bed	R	12474019	2.5	63.12
	L	12474018	2.5	129.47
8 Foot Bed	R/L	12474015	2.5	63.12
2500 Series				
6-1/2 Foot Bed	R	12474455	2.5	76.61
	L	12474454	2.5	78.23
8 Foot Bed	R/L	12474456	2.5	129.47
3500 Series-Serviced w/Frame Assy				
Crew Cab				
1500 Series	R	12474455	2.5	76.61
	L	12474454	2.5	78.23
20 **Reinf Kit, Rear Spring Hanger¶**				
Std Cab, Extended Cab				
1500 Series				
6-1/2 Foot Bed	R/L	12474020	1.5	52.54
8 Foot Bed	R/L	12474017-6	1.5	52.54
2500 Series				
6-1/2 Foot Bed	R/L	N.A.	1.5	0.00
8 Foot Bed	R/L	12474458-7	1.5	80.61
3500 Series-Serviced w/Frame Assy				
Crew Cab-Serviced w/Frame Assy				
¶Included w/Frame Assy				

Illustration Located in Next Column

21 **Cushion, Upr Rad Supt** 99-00	R/L	15999708		13.32
01-03	R/L	15772884		20.03
22 **Cushion, Lwr Rad Supt** 99-00	R/L	15033704		8.44
01-03	R/L	15761907		8.14
23 **Bolt, Rad Supt**	R/L	15712445		6.98
24 **Cushion, Upr Body Mount**				
1999-00				
Std Cab (2/Side)	R/L	15746976		13.46
Extended Cab (3/Side)	R/L	15746976		13.46
2001-03	R/L	15059114		21.66
25 **Cushion, Lwr Body Mount**				
1999-00				
Std Cab (2/Side)	R/L	15033704		8.44
Extended Cab (3/Side)	R/L	15033704		8.44
2001-03	R/L	15761907		8.14

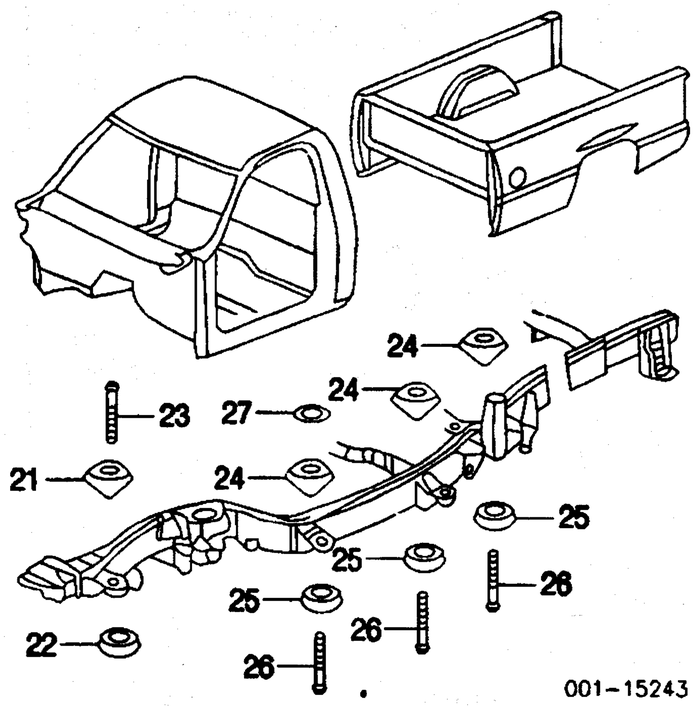

26 **Bolt, Body Mount**				
Std Cab (2/Side)	R/L	11516868		1.37
Extended Cab (3/Side)	R/L	11516868		1.37
Crew Cab	R/L	N.A.		0.00
27 **Shim, Body Mount¶ (a)**	R/L	15018263		2.04
(a) As Required				
Xmbr, Trans Support¶				
1500 Series				
Man Trans		15748078	1.5	115.79
Auto Trans	99-00	15998641	1.5	115.79
	01-03	15040426	1.5	115.79
2500, 3500 Series				
Man Trans		15057775	1.5	115.79
Auto Trans		15057774	1.5	115.79
¶Order by Application				

4WD

Add to R&R Frame		
w/4.3L Eng	m	.4
w/4.8L, 5.3L, 6.0L, 8.1L Eng		
Man Trans	m	.3
Auto Trans	m	.6
w/6.6L Eng		
Auto Trans	m	.8
To Transfer Front Spring Hanger		1.5
To Transfer Radiator Support Mtg Brackets		1.5
w/ A/C	m	.6
w/4WS	m	.8
w/Cruise Control	m	.2

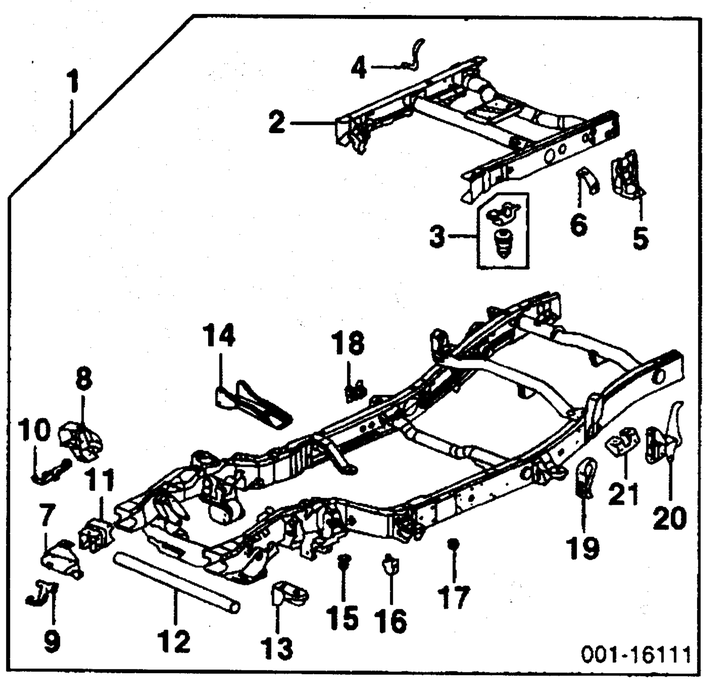

1 **Frame Assy¶**				
Std Cab				
1500 Series				
6-1/2 Foot Bed	99-02	15063954	26.5	2048.75
	03	15065906	26.5	2033.90
8 Foot Bed	99-02	15063955	26.5	2071.83
	03	15065908	26.5	2033.90
2500 Series				
8 Foot Bed	99-00	15998629	29.5	2486.95
	01-02	15753454	29.5	2158.78
	03	15065917	29.5	2288.14
3500 Series (a)	01-02	15753454	29.5	2158.78
	03	15065917	29.5	2288.14
Extended Cab				
1500 Series				
6-1/2 Foot Bed	99-01	15762120	29.5	2569.42
	03	15065907	29.5	2033.90
8 Foot Bed	99-01	15063956	29.5	2033.90
	03	15065909	29.5	1813.56
2500 Series				
6-1/2 Foot Bed	99-02	15063958	31.5	2613.86
	03	15068839	31.5	2288.14
8 Foot Bed				
1999-00		15706916	31.5	2562.51
2001-02		15753456	31.5	2233.22
2003				
Man Trans		15065919	31.5	2288.14
Auto Trans		15082215	31.5	2288.14
2500 HD Series	01-02	15753453	31.5	2247.97
	03	15065916	31.5	2288.14
3500 Series				
2001-02 (a)		15753456	31.5	2233.22
2003				
Man Trans		15065919	31.5	2288.14
Auto Trans		15082215	31.5	2288.14
Crew Cab				
1500 Series				
6-1/2 Foot Bed	01-02	15063960	32.5	2613.86
	03	15069450	32.5	2288.14
2500 Series				
6-1/2 Foot Bed				
Man Trans	01-02	15753452	32.5	2270.95
	03	15065915	32.5	2288.14
Auto Trans	01	15753452	32.5	2270.95
	02	15093468	32.5	2288.14
	03	15094871	32.5	2288.14
8 Foot Bed	01-02	15753455	32.5	2270.95
	03	15065918	32.5	2288.14
3500 Series (a)	01-02	15753455	32.5	2270.95
	03	15065918	32.5	2288.14
¶Add'l Parts &/or Dealer Contact Required				
(a) Order by Application				
2 **Frame, Rear Section¶**				
Std Cab, Extended Cab				
1500 Series				
6-1/2 Foot Bed	99-01	12479880	#11.5	482.34
	02-03	88938453	#11.5	510.61
8 Foot Bed	99-01	12479881	#11.5	482.34
	02-03	88938454	#11.5	510.61
2500 Series				
6-1/2 Foot Bed	99-00	12475257	#11.5	510.61
	01-03	12479977	#11.5	918.51
8 Foot Bed	99-01	12475258	#11.5	510.61
	02-03	12479978	#11.5	918.51
2500 HD Series		12479977	#11.5	918.51
3500 Series		12479978	#11.5	918.51
Crew Cab				
1500 Series		88938455	#11.5	510.61
2500 Series				
6-1/2 Foot Bed		12479977	#11.5	918.51
8 Foot Bed		12479978	#11.5	918.51
3500 Series		12479978	#11.5	918.51
#w/Bed Assy Removed				
3 **Bumper Kit, Rear Axle¶**				
Std Cab, Extended Cab				
1500 Series	R/L	15712438		14.75
2500, 3500 Series	R/L	N.A.		0.00
Crew Cab-Serviced w/Frame Assy				
4 **Hanger, Muffler¶**				
Std Cab, Extended Cab		15740774		3.89
Crew Cab-Serviced w/Frame Assy				
5 **Hanger Kit, Rear Spring¶**				
Std Cab, Extended Cab				
1500 Series	R/L	12474021	2.0	129.47
2500 Series	R/L	12474459	2.0	129.47
3500 Series-Serviced w/Frame Assy				
Crew Cab	R/L	12474459	2.0	129.47
6 **Reinf Kit, Rear Spring Hanger¶**				
Std Cab, Extended Cab				
1500 Series	R/L	12474022		52.54
Crew Cab-Serviced w/Frame Assy				
Bracket Kit, Impact Bar¶				
7 1500 Series-See Front Bumper Section				
8 2500, 3500 Series-See Front Bumper Section				
Hook, Tow¶				
9 1500 Series				
Std Cab, Extended Cab	R/L	15709128-9	.2	16.11
Crew Cab	R/L	15020941-0	.2	29.90
10 2500, 3500 Series	R/L	15020941-0	.2	29.90
11 **Cap, Frame Extension**				
1500 Series	R/L	12475402-1	#5.5	204.41
#Includes R&R Impact Bar Bracket Kit & Rad Support Bracket				
12 **Xmbr, Front¶**				
1500 Series				
Std Cab, Extended Cab		15716565	#3.0	57.15
Crew Cab-Serviced w/Frame Assy				
2500 Series				
Std Cab		15716565	#3.0	57.15
Extended Cab		15719509	#3.0	57.15
Crew Cab-Serviced w/Frame Assy				
3500 Series				
Std Cab		15719509	#3.0	57.15
Extended Cab, Crew Cab-Serviced w/Frame Assy				
#Deduct 1.5 w/Each Frame Extension Cap Removed				
Crew Cab-Serviced w/Frame Assy				
13 **Bracket, Rad Support¶**				
1500 Series				
Std Cab, Extended Cab	R/L	12477748-7	2.0	66.00
Crew Cab	R/L	12477750-49	2.0	66.00
2500 Series				
Std Cab, Crew Cab	R/L	12479976-5	2.0	76.27
Extended Cab	R/L	12477750-49	2.0	66.00
2500 HD Series	R	12479976	2.0	76.27
	L	12477749	2.0	66.00
3500 Series	R/L	12479976-5	2.0	76.27
14 **Brace, Control Arm¶**				
Std Cab, Extended Cab				
1500 Series		12474006		108.51
2500, 3500 Series		12474450		108.51
Crew Cab		12474450		108.51
Bumper Kit, Control Arm¶				
15 1500 Series				
Std Cab, Extended Cab				
w/RPO-Z71		15161762		0.00
w/o RPO-Z71		15153958		16.51

Procedure Explanation Pages Must Be Used with the Above Text for an Accurate Damage Report.
Comments or suggestions? Need assistance? Call 1-800-854-7030 or 858-578-6550. Ext. 8220. Fax 1-888-256-7969 or 858-549-0629.

FRAME Cont'd

4WD Cont'd

Crew Cab		15015538		16.51
16 2500, 3500 Series		15015538		16.51
17 **Spacer, Trans Support Xmbr¶ (4)**				
1500 Series		15687109		1.25
2500, 3500 Series		N.A.		0.00
18 **Insulator Kit, Torsion Bar¶**		15001006		9.07
19 **Brkt, Park Brake Cable¶**				
Std Cab, Extended Cab	R/L	15159478	1.5	31.30
Crew Cab-Serviced w/Frame Assy				
20 **Hanger Kit, Rear Spring¶**				
Std Cab, Extended Cab				
1500 Series				
6-1/2 Foot Bed	R	12474019	2.5	63.12
	L	12474018	2.5	129.47
8 Foot Bed	R/L	12474015	2.5	63.12
2500 Series				
6-1/2 Foot Bed	R	12474455	2.5	76.61
	L	12474454	2.5	78.23
8 Foot Bed	R/L	12474459	2.5	129.47
3500 Series-Serviced w/Frame Assy				
Crew Cab	R	12474455	2.5	76.61
	L	12474454	2.5	78.23
21 **Reinf Kit, Rear Spring Hanger¶**				
Std Cab, Extended Cab				
1500 Series				
6-1/2 Foot Bed	R/L	12474020	1.5	52.54
8 Foot Bed	R/L	12474017-6	1.5	52.54
2500 Series				
6-1/2 Foot Bed	R/L	N.A.	1.5	0.00
8 Foot Bed	R/L	12474458-7	1.5	80.61
3500 Series-Serviced w/Frame Assy				
Crew Cab-Serviced w/Frame Assy				
¶Included w/Frame Assy				

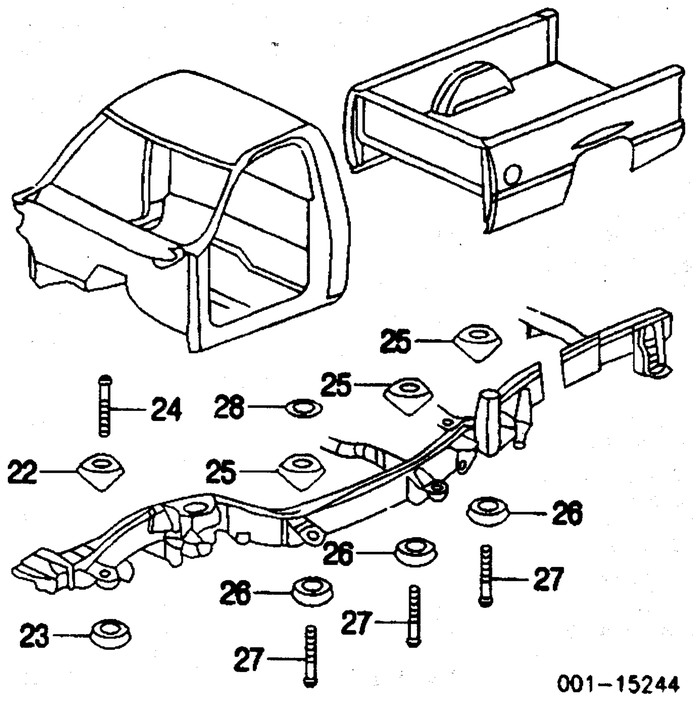

22 **Cushion, Upr Rad Supt**	99-00	R/L 15999708		13.32
	01-03	R/L 15772884		20.03
23 **Cushion, Lwr Rad Supt**	99-00	R/L 15033704		8.44
	01-03	R/L 15761907		8.14
24 **Bolt, Rad Supt**		R/L 15712445		6.98
25 **Cushion, Upr Body Mount**				
1999-00				
Std Cab (2/Side)		R/L 15746976		13.46
Extended Cab (3/Side)		R/L 15746976		13.46
2001-03		R/L 15059114		21.66
26 **Cushion, Lwr Body Mount**				
1999-00				
Std Cab (2/Side)		R/L 15033704		8.44
Extended Cab (3/Side)		R/L 15033704		8.44
2001-03		R/L 15761907		8.14
27 **Bolt, Body Mount**				
1999-00				
Std Cab (2/Side)		R/L 11516868		1.37
Extended Cab (3/Side)		R/L 11516868		1.37
2001-02		R/L 11516868		1.37
28 **Shim, Body Mount¶ (a)**		R/L 15018263		2.04
(a) As Required				
Xmbr, Trans Support¶				
1500 Series		15748036	1.5	217.54
2500, 3500 Series		15057776	1.5	164.91
¶Order by Application				

TRAILER HITCH

Illustration Located in Next Column

1 **Hitch Assy, Trailer¶**				
1999-00		12497988	.8	194.29
2001-03				
1500, 2500 Series	01	12497988	.8	194.29
	02	12497988	.8	194.29
2500 HD, 3500 Series				
6-1/2 Foot Bed		12497968	.8	140.00

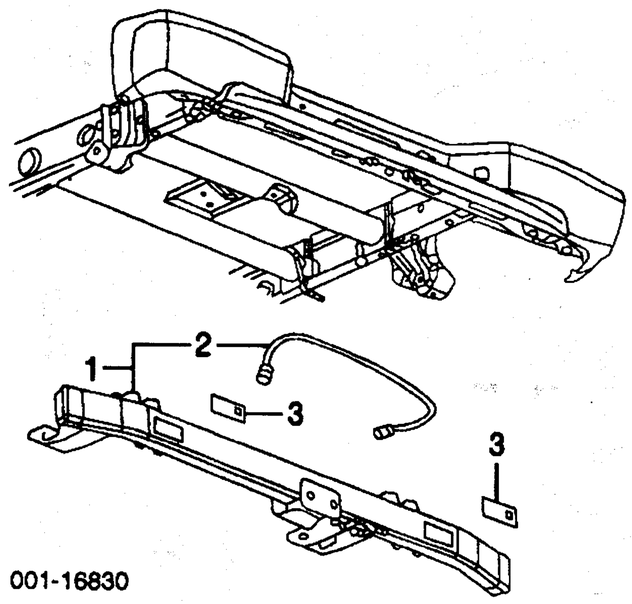

8 Foot Bed		12497969	.8	140.00
¶Accessory Part Number listed, Includes Wiring Harness and Mounting Hardware				
Platform, Hitch¶				
1999-00		15083472	.8	0.00
2001-03				
1500, 2500 Series		15083472	.8	0.00
2500 HD, 3500 Series				
6-1/2 Foot Bed		15083474	.8	223.42
8 Foot Bed		15066844	.8	190.17
2 **Harness, Wiring¶**		15306164		66.23
¶Included w/Trailer Hitch Assy				
3 **Reflector, Guard**	R/L	15710873	.2	4.80

WHEEL

Use Procedure Explanation 10 with the following text.

STEEL WHEEL

Refinish Wheel	.5
Add to R&I Spare Wheel & Tire Assy	.2

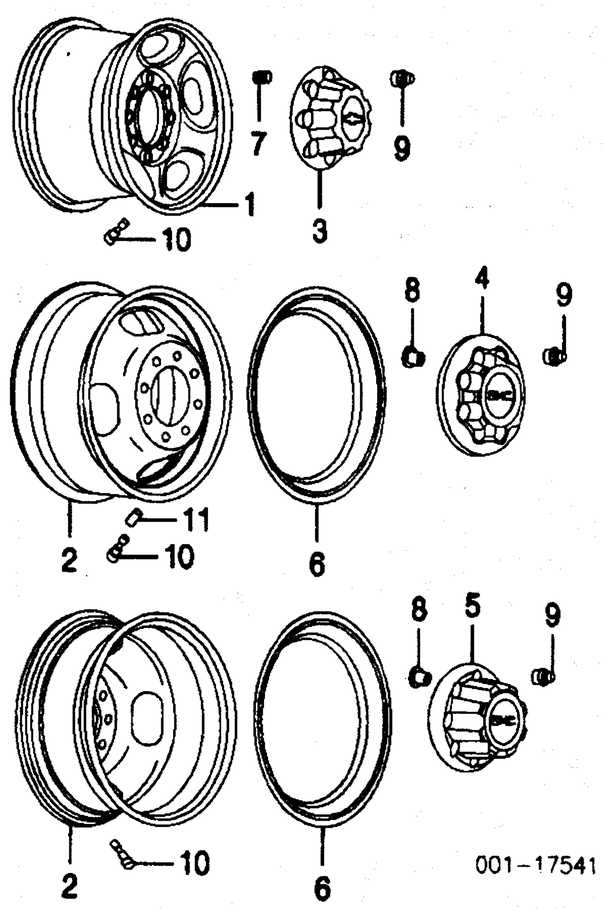

Wheel, Steel (16x6-1/2")				
1 Type 1				
Chrome				
1500 Series				
6 Lug Holes		9593150	.3	199.32
8 Lug Holes		9593151	.3	196.17
2500 Series		9593151	.3	196.17
Painted				
Silver				
1500 Series		9593915	.3	89.39
2500 Series		9593916	.3	100.98
2 Type 2				
Painted				
3500 Series				
Silver		9592552	.3	207.86
White		9592572	.3	474.31
Cap, Hub				
3 Type 1 Wheel				
Chrome				
1500 Series				
6 Lug Holes				
Chevrolet	99	15712373		27.76
	00-03	15067580		49.83
GMC	99	15712374		27.76
	00-01	88934640		49.83
	02-03	15067581		49.83
8 Lug Holes				
Chevrolet		15052380		43.53
GMC		15052381		43.53
2500 Series				
Chevrolet		15052380		43.53
GMC		15052381		43.53
Silver				
1500 Series				
Chevrolet	99	15712371		19.32
	00-01	88934637		43.02
	02-03	15067578		43.02
GMC	99	15712372		19.32
	00-01	88934638		43.02
	02-03	15067579		43.02
2500 Series				
Chevrolet		15052378		43.53
GMC		15052379		43.53
Type 2 Wheel				
3500 Series				
4 Front				
Chrome				
Chevrolet		15712392		43.53
GMC		15712393		43.53
Silver				
Chevrolet		15712384		43.53
GMC		15712385		43.53
5 Rear				
Chrome				
Chevrolet		15727140		43.53
GMC		15727141		43.53
Silver				
Chevrolet		15727138		43.53
GMC		15727139		43.53
6 **Ring, Trim**				
Type 2 Wheel				
3500 Series		15050785		49.32
Nut, Lug				
7 1500, 2500 Series		9591772		2.33
8 3500 Series		9591924		5.19
9 **Cap, Lug Nut**		15767268		2.24
10 **Stem, Valve**				
Rubber		9593595		3.66
Steel		15954889		10.27
11 **Extension, Valve Stem**		9417745		1.73

ALLOY WHEEL

Add to R&I Wheel & Tire Assy	.2

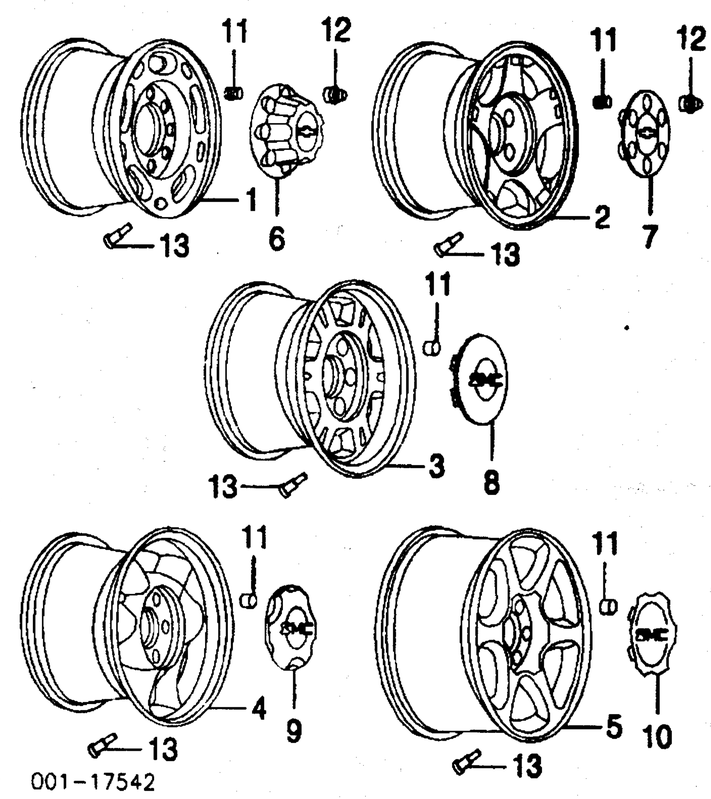

Wheel, Alloy				
1 16x6-1/2"				
1500 HD Series, 2500 Series (RPO-PY0)		12368964	.3	499.42
16x7"				
Chevrolet				
2 RPO-PF9	99-02	12368953	.3	465.05
	03	9594493	.3	0.00
GMC				
3 RPO-PF4	99-02	12368955	.3	499.42
	03	9594495	.3	0.00
4 RPO-PF9 & QC3				
Painted		12368954	.3	499.42
Polished		12487563	.3	499.42
5 17x7-1/2"				
GMC				
2001				
Partially Polished		12490113	.3	516.31
Fully Polished		88892482	.3	516.31
2002-03		88892482	.3	516.31
* **Wheel, Alloy**				
20x8-1/2"		15185513		0.00
Cap, Hub				
6 16x6-1/2" Wheels				
1500 HD Series, 2500 Series (RPO-PY0)				
Chevrolet		15039488		43.53
GMC		15039489		43.53
16x7" Wheels				
7 Chevrolet (RPO-PF9)		15712387		19.32
GMC				

Labor Times Shown are for Replacement with New OEM Undamaged Parts on New Undamaged Vehicles.
Comments or suggestions? Need assistance? Call 1-800-854-7030 or 858-578-6550. Ext. 8220. Fax 1-888-256-7969 or 858-549-0629.

8	RPO-PF4	15040220	32.54
9	RPO-PF9 & QC3		
	Painted Wheel	15712386	10.07
	Polished Wheels	15712389	16.37
10	17x7-1/2" GMC (RPO-N93)		
	Brushed Finish	9594257	35.69
	Chrome Finish	9594699	25.93
11	**Nut, Lug**	9591809	1.42
12	**Cap, Lug Nut¶**	12472839	3.66
	¶Order by Application		
13	**Stem, Valve**	9593595	3.66

SPARE WHEEL & HARDWARE

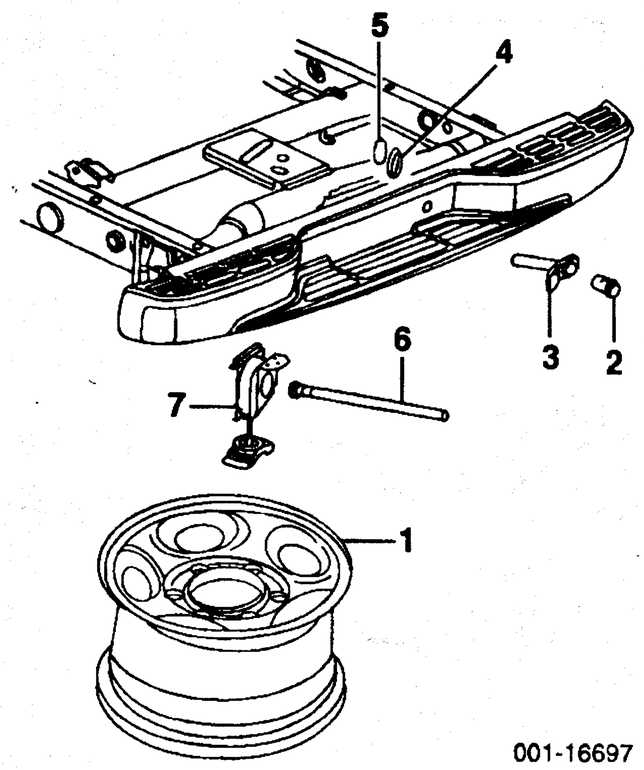

001-16697

1	**Wheel, Spare**		
	Steel		
	Chrome		
	1500 Series		
	6 Lug Holes	9593150	199.32
	8 Lug Holes	9593151	196.17
	2500 Series	9593151	196.17
	Painted		
	Black		
	1500 Series		
	6 Lug Holes	9594632	155.90
	8 Lug Holes	9594634	155.90
	2500 Series	9594634	155.90
	Silver		
	1500 Series		
	6 Lug Holes	9593915	89.39
	8 Lug Holes	9593916	100.98
	2500 Series	9593916	100.98
	3500 Series		
	Silver	9592552	207.86
	White	9592572	474.31
	Alloy		
	Argent 00-03	12490110	515.29
	Silver 00-03	12368957	515.29
2	**Cylinder, Hoist Lock**	12472979	33.05
3	**Case, Lock Cylinder** 99-01 02-03	15037295	12.20
4	**Ring, Cylinder**	15769308	5.19
5	**Retainer, Cylinder**	15040331	6.00
6	**Guide, Shaft**		
	w/Step Bumper	15029707	8.53
	w/o Step Bumper	15741363	8.53
7	**Hoist, Spare**		
	1500, 2500 Series	15703311	72.61
	2500 HD Series	15098284	63.07
	3500 Series	15703311	72.61

FRONT SUSPENSION

Use Procedure Explanation 11 with the following text.

2WD

R&I Suspension (One Side)	R/Lm	2.0
O/H Suspension (Includes R&I)		
One Side	R/Lm	3.2
Both Sides	m	6.0
Adjust Front Alignment	m	1.9
Add to Adjust Front Alignment w/4WS	m	#.2
#Includes Adjust Four Wheel Alignment		
Bleed Brake System	m	1.0

NOTE 1: R&I/R&R Does Not include alignment or bleed brake system.

NOTE 2: All Parts in this section are included in overhaul unless noted otherwise.

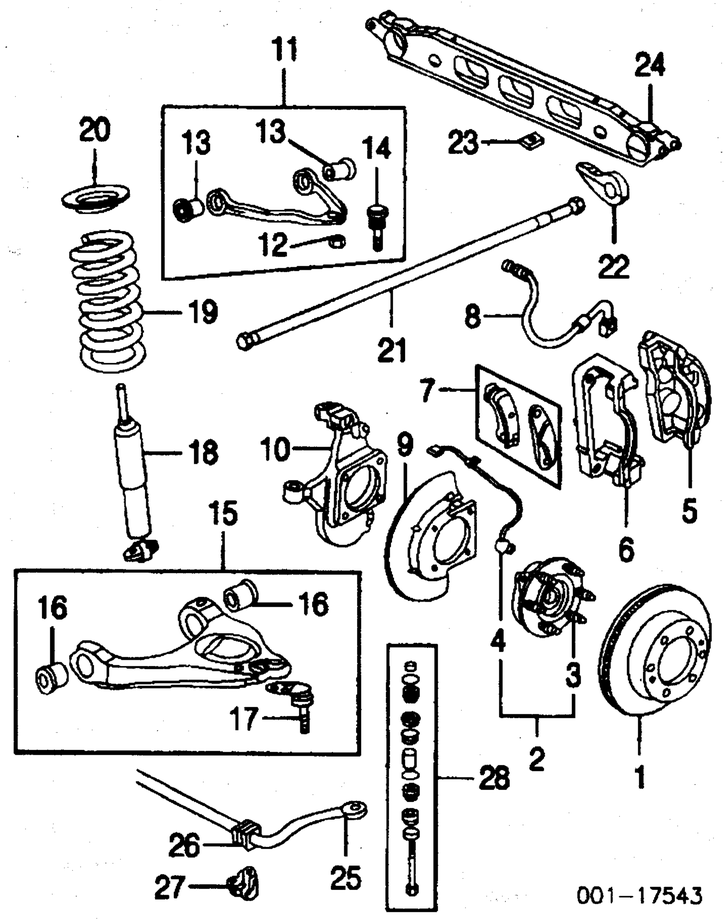

001-17543

1	**Rotor, Brake**				
	1500 Series				
	Std Cab, Extended Cab	R/L 18060214	m	#.6	108.16
	Crew Cab	R/L 18060215	m	#.6	103.00
	2500 Series	R/L 18060215	m	#.6	103.00
	2500 HD Series	R/L 18060654	m	#.6	127.72
	3500 Series	R/L 15733625	m	#.6	124.64
	#R&R Both 1.0				
2	**Hub Assy, Wheel**				
	1999-00				
	1500 Series	R/L 15037207	m	#1.0	225.61
	2500 Series	R/L 15719007	m	#1.0	264.47
	2001-02				
	1500 Series				
	Std Cab, Extended Cab	R/L 15037207	m	#1.0	225.61
	Crew Cab	R/L 15753476	m	#1.0	264.47
	2500 Series	R/L 15753476	m	#1.0	264.47
	2500 HD Series	R/L 15064670	m	#1.0	264.47
	3500 Series	R/L 15056753	m	#1.0	379.00
	#Includes R&R Brake Rotor, R&R Both 1.8				
3	**Stud, Wheel¶ (a)**				
	1500, 2500	R/L 15718996	m		3.60
	2500 HD	R/L 15741981	m		3.60
	3500	R/L 15734261	m		4.54
	(a) As Required				
4	**Sensor, Front ABS¶**				
	1500 Series				
	Std Cab, Extended Cab	R/L 15037208	m	#.9	119.82
	Crew Cab	R/L 15716203	m	#.9	119.82
	2500 Series	R/L 15716203	m	#.9	119.82
	2500 HD, 3500 Series	R/L 15056757	m	#.9	59.65
	¶Included w/Wheel Hub Assy				
	#R&R Both 1.4				
	Extension, Wheel Hub				
	3500 Series	R/L 15753478	m	.4	170.56
5	**Caliper, Brake**				
	1500 Series				
	Std Cab, Extended Cab	R 18040101	m	#.5	■169.00
		L 18040100	m	#.5	■171.00
	Crew Cab	R/L 18024109-8	m	#.5	■175.92
	2500 Series	R/L 18024109-8	m	#.5	■175.92
	3500 Series	R/L 18046220-19	m	#.5	■175.92
6	**Bracket, Caliper**				
	1500 Series				
	Std Cab, Extended Cab	R/L 18040099-8	m	#.5	72.05
	Crew Cab	R/L 18040094-3	m	#.5	72.05
	2500 Series	R/L 18040094-3	m	#.5	72.05
	3500 Series	R/L 18044328-7	m	#.5	72.05
	#R&R One Side Complete, w/Brake Rotor Removed Deduct .3, R&R Both Sides .8				
7	**Pad Set, Brake**				
	1500 Series				
	Std Cab, Extended Cab 99-02	18041762	m	#1.0	■156.60
	03	18048101	m	#1.0	■209.85
	Crew Cab	18026219	m	#1.0	■178.38
	2500 Series	18026219	m	#1.0	■178.38
	3500 Series	18042334	m	#1.0	■238.07
	#w/Brake Caliper Removed Deduct .5				
8	**Hose, Brake**				
	1500 Series				
	Std Cab, Extended Cab 99-01 R	15075742	m	#.3	0.00
	L	15748041	m	#.3	54.25
	02-03 R	15075742	m	#.3	0.00
	L	15075741	m	#.3	54.25
	Crew Cab 01 R/L	15749766-5	m	#.3	55.60
	02-03 R/L	15167036-5	m	#.3	55.60
	2500 Series R	15749766	m	#.3	55.60
	L	22163525	m	#.3	43.18
	01 R/L	15749766-5	m	#.3	55.60
	02-03 R/L	15167036-5	m	#.3	55.60
	3500 Series R/L	15749766-5	m	#.3	55.60
	02-03 R/L	15167036-5	m	#.3	55.60
	#w/Brake Caliper Removed Deduct .2				
9	**Shield, Brake**				
	1500 Series				
	Std Cab, Extended Cab	R/L 15716364	m	#1.0	11.72
	Crew Cab	R/L 15719023	m	#1.0	11.23
	2500, 3500 Series	R/L 15719023	m	#1.0	11.23
	#Includes R&R Wheel Hub, Front ABS Sensor & Brake Rotor, R&R Both Sides 1.8				
10	**Knuckle**				
	1500 Series				
	Std Cab	R/L 18060556-5	m	#1.3	218.89
	Extended Cab				
	1999-01	R/L 18060556-5	m	#1.3	218.89
	2002-03				
	w/4WS	R/L 26091749-50	m	#1.3	453.49
	w/o 4WS	R/L 18060556-5	m	#1.3	218.89
	Crew Cab	R/L 18060909-8	m	#1.3	252.16
	2500 Series 99-00	R/L 18026762-1	m	#1.3	224.51
	01-03	R/L 18060909-8	m	#1.3	252.16
	3500 Series	R/L 18060909-8	m	#1.3	252.16
	#Includes R&R Wheel Hub, Front ABS Sensor, Brake Rotor & Brake Shield, R&R Both Sides 2.4				
11	**Arm Assy, Upper Control**				
	1500 Series				
	Std Cab, Extended Cab	R/L 15047200	m	#1.2	161.65
	Crew Cab	R/L 15049881	m	#1.2	182.42
	2500 Series	R 12474582	m	#1.2	171.75
		L 12474581	m	#1.2	167.56
	00	R/L 15049880	m	#1.2	171.58
	01-03	R/L 15049881	m	#1.2	182.42
	3500 Series	R/L 15049881	m	#1.2	182.42
12	**Nut, Control Arm¶**	R/L 3537772			1.58
13	**Bushing, Upper Control Arm¶**				
	1500 Series				
	Std Cab, Extended Cab	R/L 15727765	m	#1.2	12.12
	Crew Cab	R/L 15711270	m	#1.2	23.02
	2500, 3500 Series	R/L 15711270	m	#1.2	23.02
	#R&R One Side Complete, w/Knuckle Removed Deduct .6, R&R Both Sides 2.0, Includes R&R Upper Ball Joint				
14	**Joint, Upper Ball¶ (a)**				
	w/4WS	R/L 26091742	m	#.8	39.42
	¶Included w/Upper Control Arm Assy				
	(a) w/o 4 Wheel Steering-Serviced w/Upper Control Arm Assy				
	#w/Knuckle Removed Deduct .4, R&R Both 1.4				
15	**Arm Assy, Lower Control**				
	1500				
	1999	R/L 12475524-3	m	#1.3	166.53
	2000¶	R/L 12477634-3	m	#1.3	209.30
	2001-03				
	Std Cab, Extended Cab	R/L 12478068-7	m	#1.3	163.89
	Crew Cab	R/L 12475476-5	m	#1.3	296.35
	2500	99 R 12474418	m	#1.3	167.26
		L 12475521	m	#1.3	166.14
	00	R/L 12475522-1	m	#1.3	166.14
	01-03	R/L 12475476-5	m	#1.3	296.35
	3500	R/L 12475476-5	m	#1.3	296.35
	¶Order by Application				
16	**Bushing, Lwr Cont Arm¶**				
	1999-00				
	1500				
	Front	R/L 15716171	m	#1.3	d20.50
	Rear	R/L 15716166	m	#1.3	d20.28
	2500				
	Front	R 15711142	m	#1.3	23.02
		L 15033019	m	#1.3	12.35
	Rear	R 15711142	m	#1.3	23.02
		L 15033019	m	#1.3	12.35
	2001-03				
	1500 Series				
	Std Cab, Extended Cab-Serviced w/Lower Control Arm Assy				
	Crew Cab				
	Front	R/L 15034801	m	#1.3	23.02
	Rear	R/L 15034802	m	#1.3	23.02
	2500, 3500 Series				
	Front	R/L 15034801	m	#1.3	23.02
	Rear	R/L 15034802	m	#1.3	23.02
	#R&R One Side Complete, w/Knuckle Removed Deduct .6, R&R Both Sides 2.0, Includes R&R Lower Ball Joint				
17	**Joint, Lower Ball¶**				
	1500 Series				
	1999-00	R/L 15750786	m	#.8	67.78
	2001-03				
	Std Cab, Extended Cab	R/L 15750786	m	#.8	67.78
	Crew Cab	R/L 12475477	m	#.8	63.70
	2500 Series	R/L 15016744	m	#.8	65.12
	00	R/L 15743845	m	#.8	58.93
	01-03	R/L 12475477	m	#.8	63.70
	3500 Series	R/L 12475477	m	#.8	63.70
	¶Included w/Lower Control Arm Assy				
	#w/Knuckle Removed Deduct .4, R&R Both 1.4				
18	**Absorber, Shock¶**				
	1500 Series	R/L 12477866	m	#.5	■168.40
	2500 Series 99-00	R/L 22064862	m	#.5	■126.08
	01-03	R/L 22064864	m	#.5	■126.08
	2500 HD, 3500 Series	R/L 22400058	m	#.5	■66.42
	#R&R Both .8, w/Lower Control Arm Removed .2				
19	**Spring, Coil¶**	R/L 15760838	m	#1.0	71.47
	¶Order by Application				
20	**Insulator, Spring**	R/L 15756770	m	#1.0	6.98
	#R&R One Side Complete, R&R Both Sides 1.9, Includes R&R Shock Absorber				
21	**Bar, Torsion¶**	R/L 15072934-3	m	#1.3	183.42
22	**Arm, Torsion Bar¶**	R/L 15592573-4	m	#1.3	23.74
	#R&R One Side Complete, R&R Both Sides 2.4				
	Insulator, Support¶	R/L 15001006	m		9.07
	¶Order by Application				
	Link, Support	R/L 15736950	m		12.35
23	**Nut, Torsion Bar**	R/L 15737373	m		6.53
24	**Support, Torsion Bar¶**				
	1500 Series	15769710	m	#1.5	72.56
	2500, 3500 Series	15036452	m	#1.5	58.98

FRONT SUSPENSION Cont'd

2WD Cont'd

¶Order by Application
#Deduct .6 for Each Torsion Bar Removed, Not Included in O/H

25 **Bar, Stabilizer**					
1500 Series					
Std Cab, Extended Cab		15713265	m	#.8	139.19
Crew Cab		15711020	m	#.8	97.37
2500, 3500 Series		15711020	m	#.8	97.37
#w/Each Lower Control Arm Removed Deduct .2, Includes R&R Stabilizer Bushings, Clamps & Links					
26 **Bushing, Stabilizer Bar**	R/L	15005612	m	#.3	14.33
27 **Clamp, Stabilizer**	R/L	15671602	m	#.3	4.63
#R&R One Side Complete, Not Included in O/H					
28 **Link Kit, Stabilizer Bar**	R/L	15070821	m	#.5	23.30
#R&R Both Sides .7					

4WD

R&I Suspension (One Side)	R/Lm	2.9
O/H Suspension (Includes R&I)		
One Side	R/Lm	3.9
Both Sides	m	7.6
Adjust Front Alignment	m	2.1
Add to Adjust Front Alignment w/4WS	m	#.2
#Includes Adjust Four Wheel Alignment		
Bleed Brake System	m	1.0

NOTE 1: R&I/R&R or O/H Does Not include alignment or bleed brake system.

NOTE 2: All Parts in this section are included in overhaul unless noted otherwise.

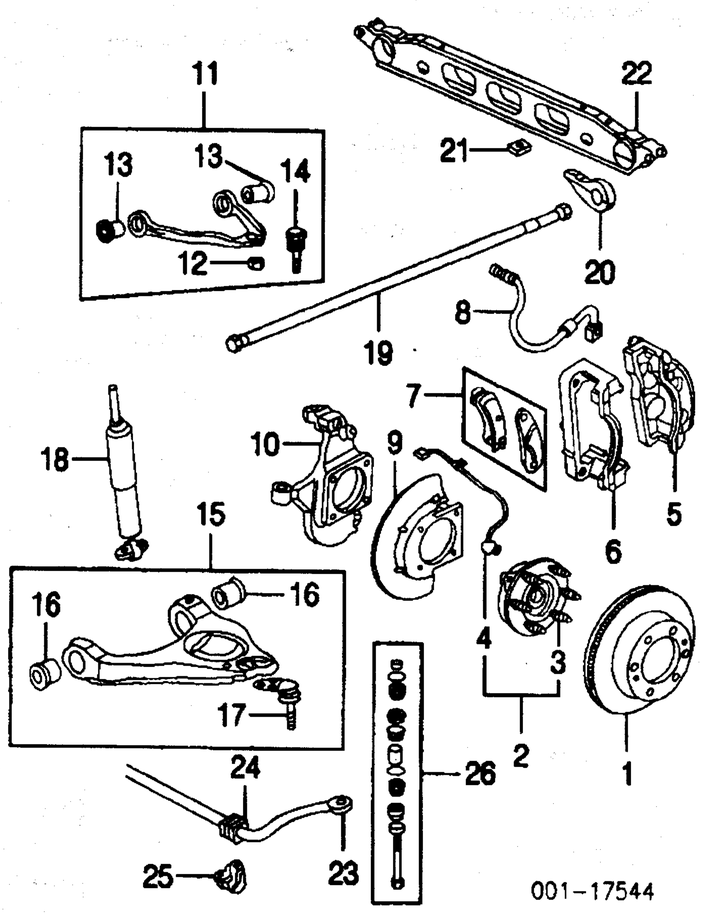

1 **Rotor, Brake**					
1500 Series					
Std Cab, Extended Cab	R/L	18060214	m	#.6	108.16
Crew Cab	R/L	18060215	m	#.6	103.00
2500 Series	R/L	18060215	m	#.6	103.00
2500 HD Series	R/L	18060654	m	#.6	127.72
3500 Series	R/L	15733625	m	#.6	124.64
#R&R Both 1.0					
2 **Hub Assy, Wheel**					
1500 Series					
Std Cab, Extended Cab	R/L	15740291	m	#1.7	177.04
Crew Cab	R/L	15042868	m	#1.7	253.68
2500 Series	R/L	15042868	m	#1.7	253.68
3500 Series	R/L	15056760	m	#1.7	379.00
#Includes R&R Brake Rotor, R&R Both 3.2					
3 **Stud, Wheel¶ (a)**					
1500, 2500 Series	R/L	15718996	m		3.60
3500 Series	R/L	15734261	m		4.54
(a) As Required					
4 **Sensor, Front ABS¶**					
1500 Series					
Std Cab, Extended Cab	R/L	15716191	m	#.9	78.00
Crew Cab	R/L	15716203	m	#.9	119.82
2500 Series	R/L	15716203	m	#.9	119.82
2500 HD Series	R/L	15056757	m	#.9	59.65
3500 Series	R/L	15056757	m	#.9	59.65
¶Included w/Wheel Hub Assy					
#R&R Both 1.4					
Extension, Wheel Hub					
3500 Series	R/L	15718998	m	.4	170.56
5 **Caliper, Brake**					
1500 Series					
Std Cab, Extended Cab	R	18040101	m	#.5	■169.00
	L	18040100	m	#.5	■171.00
Crew Cab	R/L	18024109-8	m	#.5	■175.92
2500 Series	R/L	18024109-8	m	#.5	■175.92
3500 Series	R/L	18046220-19	m	#.5	■175.92
6 **Bracket, Caliper**					
1500 Series					
Std Cab, Extended Cab	R/L	18040099-8	m	#.5	72.05
Crew Cab	R/L	18040094-3	m	#.5	72.05
2500 Series	R/L	18040094-3	m	#.5	72.05
3500 Series	R/L	18044328-7	m	#.5	72.05
#R&R One Side Complete. R&R Both Sides .8, w/Rotor Removed Deduct .3					
7 **Pad Set, Brake**					
1500 Series					
Std Cab, Extended Cab		18048101	m	#1.0	■209.85
Crew Cab		18026219	m	#1.0	■178.38
2500 Series		18026219	m	#1.0	■178.38
3500 Series		18042334	m	#1.0	■238.07
#w/Brake Caliper Removed Deduct .5					
8 **Hose, Brake**					
1500 Series					
Std Cab, Extended Cab	R/L	15075659-8	m	#.3	55.60
Crew Cab 01	R/L	15749766-5	m	#.3	55.60
02-03	R/L	15167036-5	m	#.3	55.60
2500, 3500 Series 99-01	R/L	15749766-5	m	#.3	55.60
02-03	R/L	15167036-5	m	#.3	55.60
#w/Brake Caliper Removed Deduct .2					
9 **Shield, Brake**					
1500 Series					
Std Cab, Extended Cab	R/L	15716364	m	#1.8	11.72
Crew Cab	R/L	15719023	m	#1.8	11.23
2500, 3500 Series	R/L	15719023	m	#1.8	11.23
#Includes R&R Wheel Hub, Front ABS Sensor & Brake Rotor, R&R Both Sides 3.4					
10 **Knuckle**					
1500 Series	R/L	18060556-5	m	#1.9	218.89
2500 Series 99-00	R	18060533	m	#1.9	224.51
	L	18060532	m	#1.9	252.16
01-03	R/L	18060909-8	m	#1.9	252.16
3500 Series	R/L	18060909-8	m	#1.9	252.16
#Includes R&R Hub, Front ABS Sensor, Brake Rotor & Brake Shield, R&R Both Sides 3.6					
11 **Arm Assy, Upper Control**					
1500 Series					
Std Cab, Extended Cab	R/L	15047200	m	#1.3	161.65
Crew Cab	R/L	15049881	m	#1.3	182.42
2500, 3500 Series	R/L	15049881	m	#1.3	182.42
12 **Nut, Control Arm¶**	R/L	3537772			1.58
13 **Bushing, Upper Control Arm¶**					
1500 Series					
Std Cab, Extended Cab	R/L	15727765	m	#1.3	12.12
Crew Cab	R/L	15711270	m	#1.3	23.02
2500, 3500 Series	R/L	15711270	m	#1.3	23.02
#R&R One Side Complete, w/Knuckle Removed Deduct .6, R&R Both Sides 2.4, Includes R&R Upper Ball Joint					
14 **Joint, Upper Ball¶**					
w/4WS	R/L	26091742	m	#.8	39.42
w/o 4WS-Serviced w/Upper Control Arm Assy					
¶Included w/Upper Control Arm Assy					
#w/Knuckle Removed Deduct .4, R&R Both Sides 1.4					
15 **Arm Assy, Lower Control**					
1500 Series					
Std Cab, Extended Cab	R/L	12475480-79	m	#2.9	193.91
Crew Cab	R/L	12475476-5	m	#2.9	296.35
2500, 3500 Series	R/L	12475476-5	m	#2.9	296.35
16 **Bushing, Lower Control¶**					
1500 Series					
Std Cab, Extended Cab					
Front	R/L	15153952	m	#2.9	23.02
Rear	R/L	15153953	m	#2.9	23.02
Crew Cab					
Front	R/L	15034801	m	#2.9	23.02
Rear	R/L	15034802	m	#2.9	23.02
2500, 3500 Series					
Front	R/L	15034801	m	#2.9	23.02
Rear	R/L	15034802	m	#2.9	23.02
#R&R One Side Complete, w/Knuckle Removed Deduct .6, R&R Both Sides 5.6, Includes R&R Lower Ball Joint					
17 **Joint, Lower Ball¶**					
1500 Series					
Std Cab, Extended Cab	R/L	12475478	m	#.8	69.60
Crew Cab	R/L	12475477	m	#.8	63.70
2500, 3500 Series	R/L	12475477	m	#.8	63.70
¶Included w/Lower Control Arm Assy					
#w/Knuckle Removed Deduct .4, R&R Sides 1.4					
18 **Absorber, Shock¶**					
1500 Series					
w/4WS	R/L	22400363	m	#.5	■270.48
w/o 4WS	R/L	12477867	m	#.5	■125.56
2500 Series	R/L	22064863	m	#.5	■93.02
3500 Series	R/L	22400058	m	#.5	■66.42
#R&R Both .8, w/Lower Control Arm Removed Deduct .3					
19 **Bar, Torsion¶**	R/L	15072934-3	m	#1.3	183.42
20 **Arm, Torsion Bar¶**	R/L	15592573-4	m	#1.3	23.74
#R&R One Side Complete, R&R Both Sides 2.4					
Insulator, Supt¶	R/L	15001006	m		9.07
¶Order by Application					
Link, Torsion Bar	R/L	15736950	m		12.35
21 **Nut, Torsion Bar**	R/L	15737373	m		6.53
22 **Support, Torsion Bar¶**					
1500 Series		15063980	m		56.64
2500 Series 99-00		15769710	m		72.56
01-02		15036452	m		58.98
3500 Series		15036452	m		58.98
¶Order by Application					
23 **Bar, Stabilizer**					
1500 Series					
Std Cab, Extended Cab		15153954	m	#1.0	87.12
Crew Cab		15711020	m	#1.0	97.37
2500, 3500 Series		15711020	m	#1.0	97.37
#w/Each Lower Control Arm Removed Deduct .2, Includes R&R Stabilizer Bushings, Clamps & Links, Not Included in O/H					
24 **Bushing, Stabilizer Bar**					
1500 Series					
Std Cab, Extended Cab	R/L	14071381	m	#.3	6.19
Crew Cab	R/L	15005612	m	#.3	14.33
2500, 3500 Series	R/L	15005612	m	#.3	14.33
25 **Clamp, Stabilizer Bar**	R/L	15671602	m	#.3	4.63
#R&R One Side Complete, Not Included in O/H					
26 **Link Kit, Stabilizer Bar**	R/L	15070821	m	#.4	23.30
#Not Included in O/H					

FRONT DRIVE AXLE

R&I Carrier Housing Assy	m	2.3

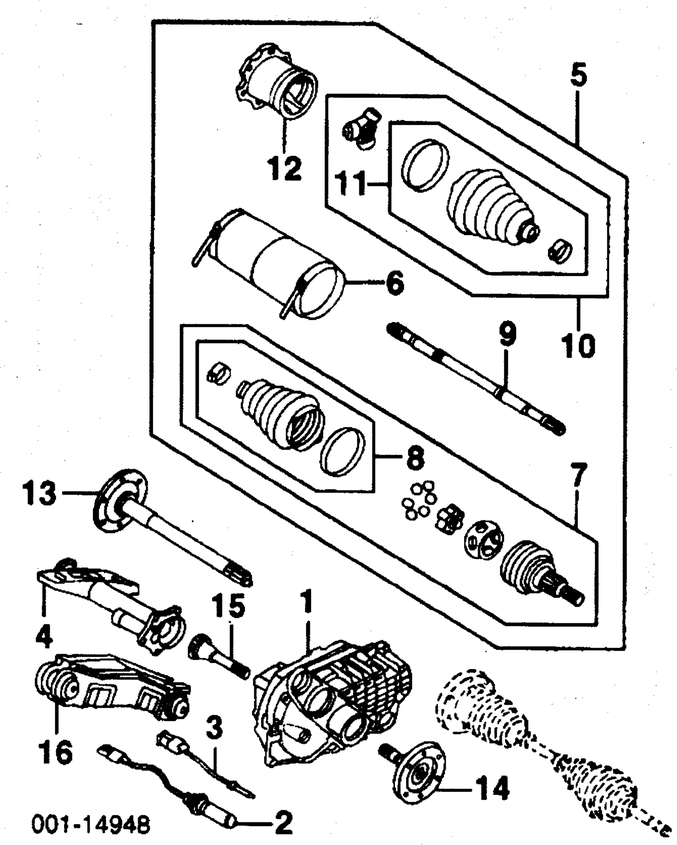

1 **Housing, Carrier**					
1500 Series					
Std Cab, Extended Cab		26058831	m	6.8	795.35
Crew Cab		12471637	m	6.8	748.04
2500 Series	99-00	26058827	m	6.8	748.04
	01-03	12471637	m	6.8	748.04
3500 Series		12471637	m	6.8	748.04
2 **Switch, Actuator**		26060073	m	.5	114.84
3 **Switch, Engagement**		N.A.	m	.6	0.00
4 **Tube, Housing**					
1500 Series					
Std Cab, Extended Cab		26058833	m	#2.3	100.75
Crew Cab		26058828	m	#2.3	100.75
2500, 3500 Series		26058828	m	#2.3	100.75
#Includes R&R Axle Shaft, w/Knuckle Removed Deduct 1.0					
5 **Shaft Assy, Axle**					
1500 Series					
Std Cab, Extended Cab					
w/Protective Cover	R/L	26069252	m	#2.2	560.68
w/o Protective Cover	R/L	26069244	m	#2.2	411.84
Crew Cab	R/L	26069242	m	#2.2	574.70
2500 Series					
1999-00					
w/Protective Cover	R/L	26069251	m	#2.2	d548.00
w/o Protective Cover	R/L	26069242	m	#2.2	574.70
2001-03	R/L	26069242	m	#2.2	574.70
3500 Series	R/L	26069242	m	#2.2	574.70
6 **Cover, Protective¶**					
1500 Series	R/L	26039455	m	#2.2	127.23
#R&R One Side Complete, w/Knuckle Removed Deduct 1.3					
7 **Joint Assy, Outer CV¶**					
1500 Series					
Std Cab, Extended Cab	R/L	26069245	m	#.6	251.12
Crew Cab	R/L	26069243	m	#.6	256.36
2500, 3500 Series	R/L	26069243	m	#.6	256.36
8 **Boot Kit, CV Joint¶ (a)**					
1500 Series					
Std Cab, Extended Cab	R/L	26069246	m	#.6	24.58
Crew Cab	R/L	26062619	m	#.6	24.58
2500, 3500 Series	R/L	26062619	m	#.6	24.58
(a) Included w/Outer Joint Assy					
#R&R One Side Complete, w/Axle Shaft Removed, Not Included in R&R Carrier Housing					
9 **Shaft, Drive Axle¶**					
1999-00					
1500 Series	R/L	26069076	m	#1.0	54.64
2500 Series	R/L	26059170	m	#1.0	271.08
2001-03-Serviced w/Axle Shaft Assy					
#w/Axle Shaft Assy Removed, Includes R&R Outer Joint, Spider Assy & Boots One Side					
10 **Spider Assy, Tripot¶**					
1500 Series					
Std Cab, Extended Cab	R/L	26062616	m	#.6	147.08
Crew Cab	R/L	26062617	m	#.6	147.08
2500, 3500 Series	R/L	26062617	m	#.6	147.08
11 **Boot Kit, Tripot¶ (a)**					
1500 Series					
Std Cab, Extended Cab	R/L	26062615	m	#.6	24.58
Crew Cab	R/L	26062618	m	#.6	24.58
2500, 3500 Series	R/L	26062618	m	#.6	24.58
(a) Included w/Tripot Spider Assy					
12 **Housing, Tripot¶**					

Labor Times Shown are for Replacement with New OEM Undamaged Parts on New Undamaged Vehicles.
Comments or suggestions? Need assistance? Call 1-800-854-7030 or 858-578-6550. Ext. 8220. Fax 1-888-256-7969 or 858-549-0629.

1500 Series					
Std Cab, Extended Cab	R/L	26056763	m	#.6	90.36
Crew Cab	R/L	26056765	m	#.6	90.36
2500, 3500 Series	R/L	26056765	m	#.6	90.36
¶Included w/Axle Shaft Assy					
#R&R One Side Complete, w/Axle Shaft Assy Removed, Not Included in O/H					
13 Shaft, Right Outer					
1500 Series					
Std Cab, Extended Cab		26058832	m	#2.3	308.70
Crew Cab		26058829	m	#2.3	180.70
2500, 3500 Series		26058829	m	#2.3	180.70
#Includes R&R Housing Tube, w/Knuckle Removed Deduct 1.0					
14 Shaft, Left Outer					
1500 Series					
Std Cab, Extended Cab		26058813	m	#1.6	309.82
Crew Cab		26058806	m	#1.6	271.08
2500, 3500 Series		26058806	m	#1.6	271.08
#w/Knuckle Removed Deduct 1.0					
15 Shaft, Inner					
1500 Series					
Std Cab, Extended Cab		15588366	m	#	160.53
Crew Cab		15521907	m	#	160.53
2500, 3500 Series		15521907	m	#	160.53
#Included in R&R Carrier Housing					
16 Bracket, Axle					
1500 Series					
Std Cab, Extended Cab		15999801			42.42
Crew Cab		15999802			37.23
2500, 3500 Series		15999802			37.23

STEERING LINKAGE

W/O RACK & PINION STEERING

NOTE: R&R Does Not include adjust wheel alignment.

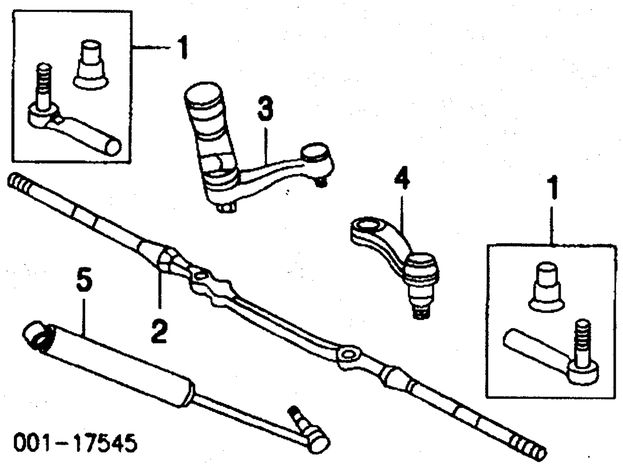

1 End, Outer Tie Rod					
1500 Series					
Std Cab, Extended Cab	R/L	12471376	m	.3	79.84
Crew Cab	R/L	12471649	m	.3	79.84
2500, 3500 Series	R/L	12471649	m	.3	79.84
2 Rod, Relay					
1500 Series					
Std Cab, Extended Cab		12471375	m	#1.1	295.23
Crew Cab		12471381	m	#1.1	268.82
2500, 3500 Series		12471381	m	#1.1	268.82
#Includes R&R Outer Tie Rod Ends					
3 Arm, Idler					
1500					
Std Cab, Extended Cab		12471378	m	#.6	129.96
Crew Cab		12471383	m	#.6	154.77
2500, 3500		12471383	m	#.6	154.77
#w/4 WD Add .2					
4 Arm, Pitman					
1500					
Std Cab, Extended Cab		12471379	m	#.8	106.65
Crew Cab		12479051	m	#.8	106.65
2500, 3500		12479051	m	#.8	106.65
#w/4 WD Add .8					
5 Absorber, Steering					
2500, 3500		15059138	m	.6	65.00

STEERING GEAR

W/O RACK & PINION STEERING

R&I Steering Gear Assy
- 2WD ..... m 1.6
- 4WD ..... m 2.2

O/H Steering Gear (Includes R&I) ..... m 2.6

Add to R&R or O/H Steering Gear
- w/4WD ..... m .6

NOTE: R&I/R&R or O/H Does Not include alignment or bleed brake system.

NOTE: All Parts in this section are included in overhaul unless noted otherwise.

Illustration Located in Next Column

1 Gear Assy					
1500 Series					
Std Cab	99-01	26080929	m	#1.6	599.26

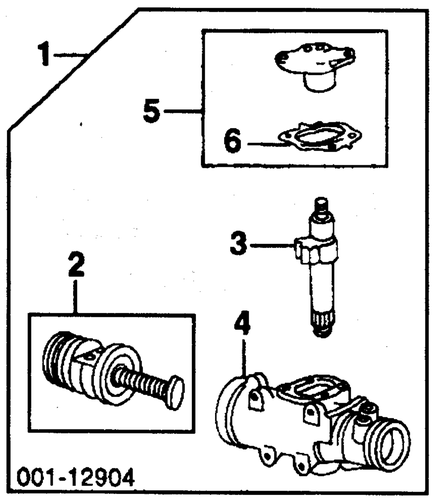

	02-03	15176182			630.79
Extended Cab					
w/4WS	01-02	15076532	m	#1.6	641.98
	03	15173571	m	#1.6	641.98
w/o 4WS	99-01	26080929	m	#1.6	599.26
	02-03	15176182	m	#1.6	630.79
Crew Cab	01	26100337	m	#1.6	R438.60
	02-03	26099875	m	#1.6	R438.60
2500, 3500 Series		15068759	m	#1.6	586.78
2 Rack & Piston¶					
1500 Series					
Std Cab, Extended Cab	99-00	7828039	m	#2.6	291.86
	01-03	7817529	m	#2.6	291.86
Crew Cab		7817529	m	#2.6	291.86
2500, 3500 Series		7817529	m	#2.6	291.86
#w/4 WD Add .4					
3 Shaft, Pitman¶ (a)					
1999-00					
1500 Series					
Std Cab, Extended Cab		7815885	m	2.1	172.86
Crew Cab		7813631	m	2.1	172.86
2500, 3500		7813631	m	2.1	172.86
2001-03		26090550	m	2.1	237.32
(a) Order by Application					
4 Housing, Gear¶					
1500 Series					
Std Cab, Extended Cab-Serviced w/Gear Assy					
Crew Cab		26033377	m	#2.6	573.60
2500, 3500 Series		26033377	m	#2.6	573.60
#w/4 WD Add .4					
5 Cover Assy, Housing¶					
1500 Series					
Std Cab, Extended Cab-Serviced w/Pitman Shaft					
Crew Cab		7817484	m		48.56
2500, 3500 Series		7817484	m		48.56
6 Seal, Cover¶ (a)					
1500 Series					
Crew Cab		7817486	m		22.79
2500, 3500 Series		7817486	m		22.79
¶Included w/Gear Assy					
(a) Included w/Housing Cover Assy					

FRONT STEERING LINKAGE/GEAR

W/RACK & PINION STEERING

R&I Steering Gear Assy ..... m 2.2

O/H Steering Gear Assy (Includes R&I) ..... m 3.4

NOTE 1: R&I/R&R or O/H Does Not include adjust wheel alignment.

NOTE 2: All Parts in this section are included in overhaul unless noted otherwise.

Illustration Located in Next Column

1 Gear, Steering					
1999-00					
Original Design		26079794	m	2.2	R798.42
Modified Design¶		26087761	m	2.2	R547.53
2001-03 (a)		88991058	m	2.2	416.66
¶Additional Parts &/or Dealer Contact Required					
(a) Order by Application					
2 Boot		26075957	m		45.18
3 Bearing Kit, Shaft		26032824	m		37.23
4 Cover, Lower Housing		7846884	m		17.18
5 Line Kit, Right¶		26078155	m	#.5	33.02
6 Line Kit, Left¶		26048059	m	#.5	33.02
¶Order by Application					
#R&R Both Sides .8					
7 Rod, Inner Tie	R/L	26079801	m	#.6	64.32
8 Ring, Tie Rod	R/L	26061045	m	#.6	7.09
#R&R One Side Complete, Includes R&R Outer Tie Rod & Boot					
9 Boot, Tie Rod	R/L	26076545	m	#.3	45.14
10 Rod, Outer Tie	R/L	26076544	m	#.3	62.26
#R&R One Side Complete					

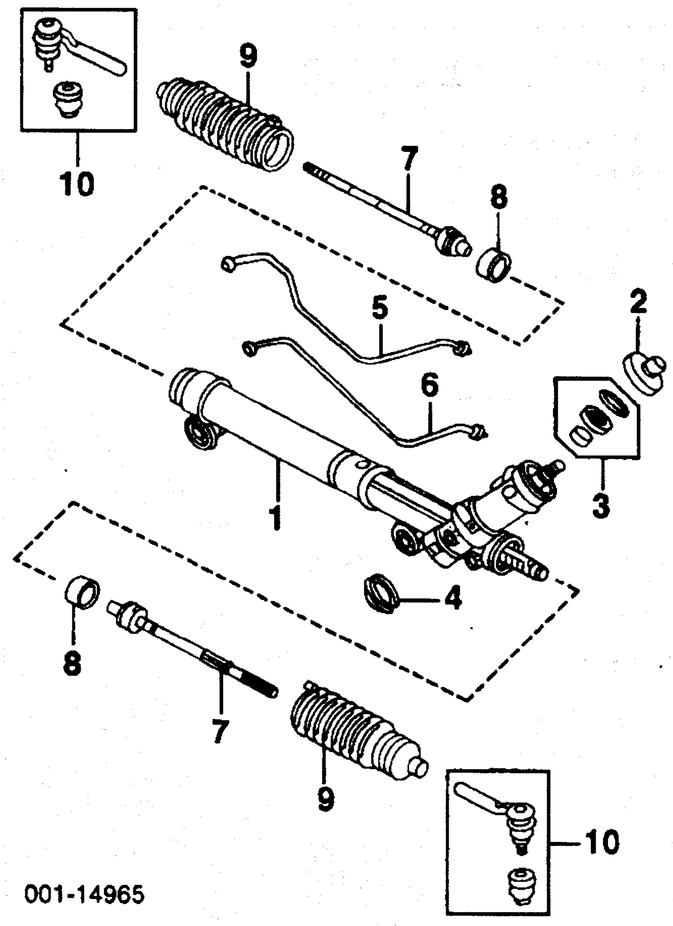

STEERING PUMP

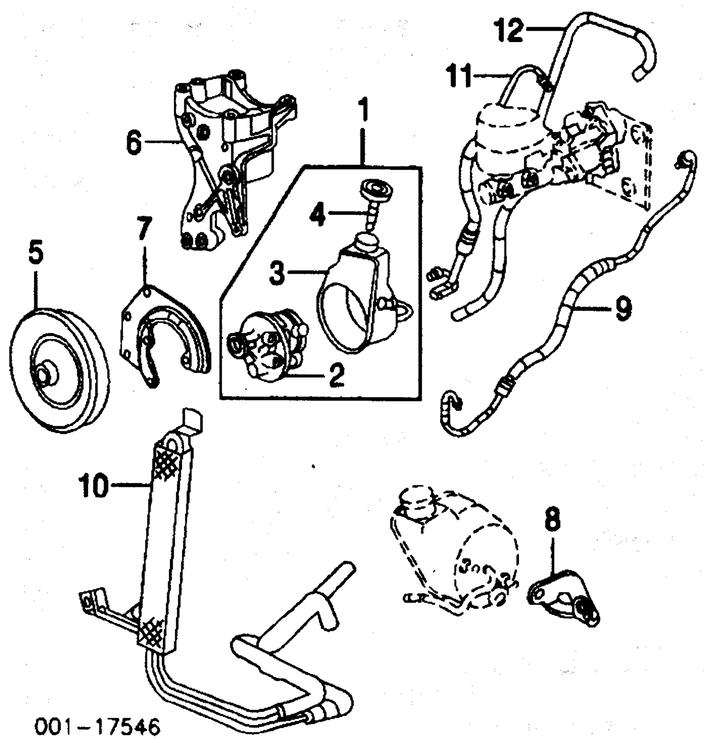

1 Pump Assy					
1500 Series					
2WD					
Std Cab, Extended Cab					
1999		26081015	m	2.0	362.19
2000					
1st Design (Stamped 26081015)		26081015	m	2.0	362.19
2nd Design (Stamped 15766354)		15766354	m	2.0	353.65
2001-02		15766354	m	2.0	353.65
2003 (a)		15076609	m	2.0	353.65
Crew Cab		26081016	m	2.0	362.19
4WD					
Std Cab	99-02	15077366	m	2.0	357.14
	03	15076611	m	2.0	353.65
Extended Cab					
Chevrolet	99-02	15077366	m	2.0	357.14
	03	15076611	m	2.0	353.65
GMC					
Sierra	99-02	15077366	m	2.0	357.14
	03	15076611	m	2.0	353.65
Sierra C3, Sierra Denali	01-02	26081015	m	2.0	362.19
	03	15095939	m	2.0	0.00
Crew Cab	01-02	26081016	m	2.0	362.19
	03	N.A.	m	2.0	0.00
2500, 3500					
Gas					
6.0L Eng		26081016	m	2.0	362.19
8.1L Eng		15754191	m	2.0	353.65
Diesel		15772444	m	2.0	362.19
(a) Order by Application					
2 Housing¶		26046179	m	#2.7	121.25
3 Reservoir¶					
1500 Series					
Std Cab, Extended Cab		26045594	m	#2.7	57.78
Crew Cab		26045591	m	#2.7	57.78
2500, 3500 Series					
1999-00		26045591	m	#2.7	57.78
2001-03					
Gas					
6.0L Eng		26045591	m	#2.7	57.78

STEERING PUMP Cont'd

8.1L Eng		26087431	m	#2.7	119.78
Diesel	01-02	26078885	m	#2.7	116.86
	03	26101115	m	#2.7	0.00
#R&R Complete					
4 **Cap, Reservoir¶**					
1500 Series					
Std Cab, Extended Cab		26042498			7.44
Crew Cab		26047356			28.10
2500, 3500 Series					
Gas					
6.0L Eng		26047356			28.10
8.1L Eng		26086336			63.39
Diesel		26047356			28.10
¶Included w/Pump Assy					
5 **Pulley, Pump**					
Gas		10085755	m	.7	25.16
Diesel		97233357	m	.7	11.00
6 **Bracket, Strg Pump**					
Gas					
4.3L Eng		12554522		#.2	63.70
#w/Pump Assy Removed					
Bracket, Alt/Pwr Strg					
Gas					
4.8L, 5.3L, 6.0L, 8.1L Eng-See Electrical Section					
Diesel-See A/C /Heater/Ventilation Section					
¶Serviced w/Compressor Bracket					
7 **Brace, Front Strg Pump**					
Diesel		97209550			5.04
8 **Brace, Rear Strg Pump**					
Gas					
4.3L Eng		10236998		#.2	3.65
4.8L, 5.3L, 6.0L Eng		12554032		#.2	9.54
8.1L Eng		12558966		#.2	9.47
Diesel		97209551		#.2	26.33
#w/Pump Assy Removed					
9 **Hose, Pressure¶**					
1500 Series					
2WD					
Std Cab, Extended Cab					
Pump Side		26068830	m	1.1	71.58
Rack & Pinion Side		26051184	m	1.1	71.58
Crew Cab		26071669	m	1.1	84.19
4WD					
Std Cab		26080540	m	1.1	86.98
Extended Cab					
1999-00		26080540	m	1.1	86.98
2001-03					
1st Design		26080540	m	1.1	86.98
2nd Design		15772604	m	1.1	102.91
Crew Cab	01-02	26071669	m	1.1	84.19
	03	26051189	m	1.1	35.54
2500 Series					
Gas					
8500 Lb GVW, 8600 Lb GVW		26051189	m	1.1	35.54
9200 Lb GVW		26071669	m	1.1	84.19
Diesel		15062625	m	1.1	67.32
3500 Series					
Gas		26071669	m	1.1	84.19
Diesel		15062625	m	1.1	67.32
¶Order by Application					
Pipe, Return					
Gas		26051176	m	1.0	11.25
Diesel		26077757	m	1.0	32.32
Hose, Return					
1500, 2500 Series					
2WD		26069158	m	.7	20.39
10 **Cooler, Pwr Strg Fluid**					
4.3L Eng		26080634	m	1.3	47.42
4.8L, 5.3L Eng					
2WD		26080635	m	1.3	47.42
4WD		26081363	m	1.3	47.42
6.0L Eng		26080637	m	1.3	47.42
8.1L Eng		26078989	m	1.3	46.58
11 **Hose, Booster Inlet**					
1500 Series					
Crew Cab		15764127	m	.8	46.42
2500 Series		15764127	m	.8	46.42
2500 HD, 3500 Series					
Gas		15770019	m	.8	46.58
Diesel		15772445	m	.8	46.58
12 **Hose, Booster Outlet**					
1500 Series					
Crew Cab		26080632	m	1.1	46.42
2500 Series		26080632	m	1.1	46.42
2500 HD Series					
Gas		26071670	m	1.1	46.58
Diesel		26078381	m	1.1	46.42

STEERING WHEEL/COLUMN

NOTE: All Parts in this section are included in overhaul unless noted otherwise.

WHEEL & TRIM

Illustration Located in Next Column

1 **Wheel Assy, Steering¶**					
1999-02					
Chevrolet					
Standard		15763214	m	.5	259.32
Leather Wrapped		15763216	m	.5	307.74
GMC					

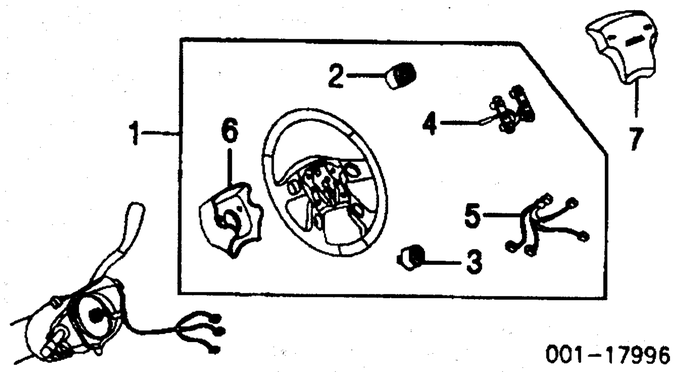

Sierra					
w/HT Pkg					
Green	00-01	15765450	m	.5	315.44
Yellow	00-01	15765452	m	.5	315.44
w/o HT Pkg					
Standard		15763214	m	.5	259.32
Leather Wrapped		15763216	m	.5	307.74
Sierra C3, Sierra Denali					
Neutral		15770096	m	.5	617.37
Pewter		15770095	m	.5	617.37
2003					
Chevrolet					
Standard					
Neutral		15183315	m	.5	0.00
Pewter		15183316	m	.5	0.00
Leather Wrapped					
w/Elect Accessory Control		15085626	m	.5	292.61
w/o Elect Accessory Control		15768324	m	.5	344.98
GMC					
Sierra					
Standard					
Neutral		15183315	m	.5	0.00
Pewter		15183316	m	.5	0.00
Leather Wrapped					
w/Elect Accessory Control		15085626	m	.5	292.61
w/o Elect Accessory Control		15768324	m	.5	344.98
Sierra Denali					
Neutral		15085392	m	.5	292.61
Pewter		15085391	m	.5	292.61
¶Order by Application					
2 **Switch, Radio Control¶**	03	R/L 1999443-2	m	.5	16.84
3 **Switch, Driver Info Center¶**	03	R 12450155	m	.5	0.00
		L 12450243	m	.5	13.61
4 **Contact, Horn¶**		16821883			13.35
5 **Harness, Wiring¶**	03	16824549	m		22.39
6 **Shroud, Strg Wheel¶ (a)**					
1999-00		16759176			5.84
2001-02					
Chevrolet					
Neutral		16866207			25.25
Pewter		16866208			25.25
GMC					
w/HT Pkg		16759176			5.84
w/o HT Pkg					
Neutral		16866207			25.25
Pewter		16866208			25.25
2003					
Chevrolet					
Standard		16824540			6.54
Leather Wrapped					
Neutral		16868716			0.00
Pewter		16868715			0.00
GMC					
Sierra					
Standard		16824540			6.54
Leather Wrapped					
Neutral		16868716			0.00
Pewter		16868715			0.00
Sierra Denali					
Neutral		16868714			0.00
Pewter		16868713			0.00
¶Included w/Steering Wheel Assy					
(a) Order by Application					
7 **Module, Driver Air Bag-See Air Bag System Section**					

COLUMN

R&I Steering Column Assy	m	1.0
O/H Steering Column Assy (Includes R&I)	m	2.8

Illustration Located in Next Column

1 **Column Assy**					
1999-00					
Man Trans					
w/Cruise Control	99	26083594	m	1.5	886.79
	00	26090144	m	1.5	1217.93
w/o Cruise Control	99	26083595	m	1.5	886.79
	00	26090145	m	1.5	1217.93
Auto Trans (a)					
w/Cruise Control	99	26067616	m	1.5	881.00
	00	26090140	m	1.5	877.61
w/o Cruise Control	99	26067617	m	1.5	1020.39
	00	26070827	m	1.5	865.16
2001-02					
Man Trans					
w/Cruise Control		26093684	m	1.5	1150.16
w/o Cruise Control		26094446	m	1.5	1178.91
Auto Trans (a)					
Chevrolet					

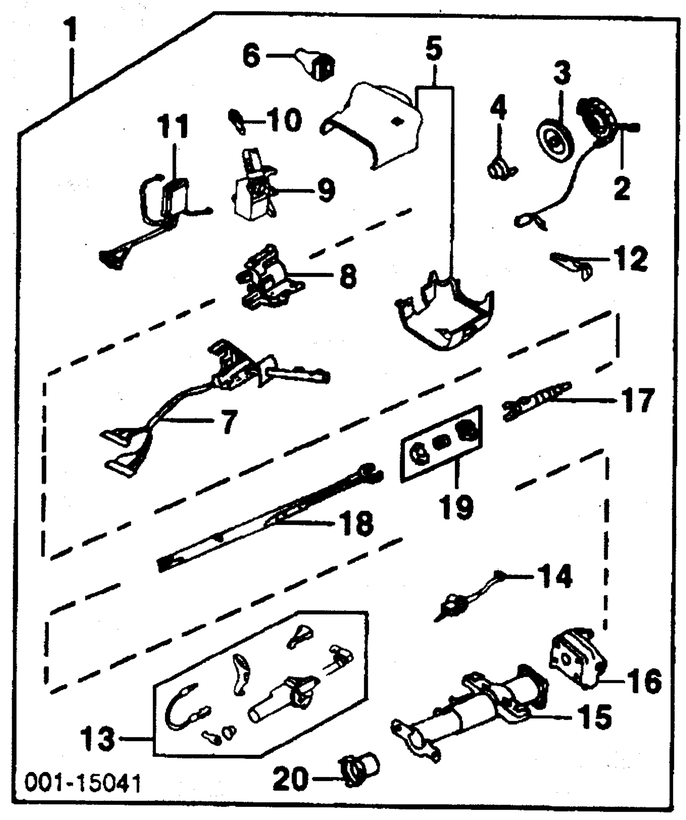

w/Cruise Control		26094443	m	1.5	1313.33
w/o Cruise Control		26094444	m	1.5	1320.07
GMC					
Sierra					
w/Cruise Control		26094443	m	1.5	1313.33
w/o Cruise Control		26094444	m	1.5	1320.07
Sierra C3, Sierra Denali					
w/4WS		26090718	m	1.5	1589.21
w/o 4WS		26094437	m	1.5	1434.56
2003 (a)		26091392	m	1.5	856.16
(a) Order by Application					
2 **Coil, SIR**					
1999		26087318	m	#.8	83.10
2000-02					
Chevrolet		26087306	m	#.8	110.10
GMC					
Sierra		26087306	m	#.8	110.10
Sierra C3, Sierra Denali		26087300	m	#.8	109.10
2003					
w/Elect Accessory Control		26101828	m	#.8	227.14
w/o Elect Accessory Control		26101826	m	#.8	120.00
#Includes R&I/R&R Steering Wheel & Air Bag Module					
3 **Shield, Shaft¶**	99	26045147	m	#.8	24.14
	00	26090892	m	#.8	6.79
4 **Cam, Signal Cancel¶**		26061094	m	#.8	14.96
#R&R Complete, Includes R&R SIR Coil					
5 **Cover, Column¶**					
1999-02					
Man Trans		26072994	m	.5	28.63
Auto Trans					
Chevrolet		26078127	m	.5	28.63
GMC					
Sierra		26078127	m	.5	28.63
Sierra C3, Sierra Denali					
Neutral		26078128	m	.5	28.63
Pewter		26078129	m	.5	28.63
2003					
Man Trans		26089146	m	.5	27.20
Auto Trans					
Chevrolet		26089140	m	.5	31.58
GMC					
Sierra		26089140	m	.5	31.58
Sierra Denali					
Neutral		26089141	m	.5	0.00
Pewter		26089142	m	.5	0.00
6 **Seal, Lever Housing¶**					
Auto Trans		26061989	m	.3	8.77
7 **Switch, Signal¶**					
w/Cruise Control		26090412	m	.3	270.25
w/o Cruise Control		26090413	m	.3	270.25
8 **Housing, Strg Column¶**					
1999		26056154	m	2.8	280.35
2000		26075123	m	2.8	280.35
2001-02 (a)					
Man Trans		26085438	m	2.8	287.37
Auto Trans		26094379	m	2.8	283.12
2003 (a)		26090769	m	2.8	0.00
(a) Order by Application					
9 **Case, Lock Cyl¶**	99	26056263	m	2.8	118.86
	00-03	26093782	m	2.8	100.33
10 **Cyl, Ignition Lock¶**					
1999-02					
Man Trans		12472981	m	.8	39.79
Auto Trans		12472980	m	.8	39.79
2003					
Man Trans		88937329	m	.8	35.95
Auto Trans		88937315	m	.8	35.95
11 **Switch, Ignition/Start¶**					
1999					
Man Trans		26078379	m	1.3	170.24
Auto Trans		26070107	m	1.3	229.95
2000					
Man Trans		26098763	m	1.3	98.05
Auto Trans		26098764	m	1.3	127.58
2001-02					
Chevrolet		26098763	m	1.3	98.05
GMC					
Sierra		26098763	m	1.3	98.05

Labor Times Shown are for Replacement with New OEM Undamaged Parts on New Undamaged Vehicles.
Comments or suggestions? Need assistance? Call 1-800-854-7030 or 858-578-6550. Ext. 8220. Fax 1-888-256-7969 or 858-549-0629.

Sierra C3, Sierra Denali		26076797	m	1.3	129.41
2003		N.A.			0.00
12 **Lever, Tilt Release¶**	99	26067526	m		9.60
	00-03	26069514	m		9.60
13 **Control, Shift¶**					
Auto Trans		26092432	m		164.91
14 **Actuator, Shift Lever¶**					
Auto Trans		26064466	m		35.09
15 **Jacket¶**					
Man Trans		26072361	m	2.8	149.32
Auto Trans		26072360	m	2.8	149.32
16 **Support, Column¶**					
1999-00		26036309	m		59.21
2001-03					
Man Trans		26087187	m		83.63
Auto Trans		26080562	m		83.63
17 **Shaft, Upper¶**	99-02	26064247	m	2.8	49.95
	03	26090770	m	2.8	0.00
18 **Shaft, Lower¶**	99	26049424	m	2.8	33.89
1999-02		26083370	m	2.8	65.70
2003					
1500, 2500 Series		N.A.	m	2.8	0.00
2500 HD, 3500 Series		15772436	m	2.8	268.28
19 **Sphere Kit¶**	99-02	26026564	m	2.8	7.47
	03	N.A.	m	2.8	0.00
Sensor, Wheel Position¶					
w/4WS	02	26098996	m	2.8	■224.74
	03	26100011	m	2.8	0.00
20 **Bearing, Lwr Column¶ (a)**		26056146	m	2.8	23.91

¶Included w/Column Assy
(a) Order by Application

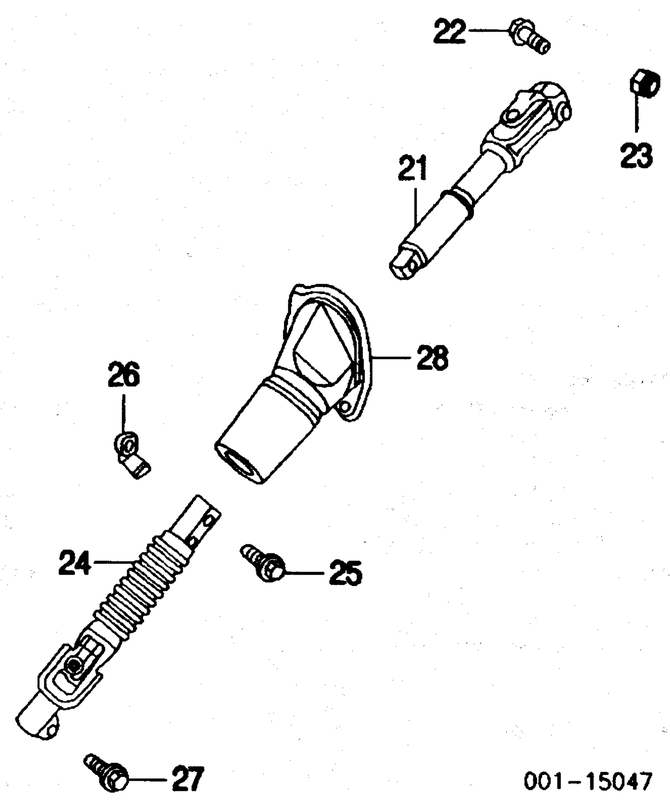

001-15047

21 **Shaft, Upr Inter Strg**		26085548	m		127.86
22 **Bolt, Upper Shaft**		11515768			.65
23 **Nut, Upper Shaft**		11514597			3.81
24 **Shaft, Coupling**					
1999-00					
2WD					
1500 Series		26078078	m	.8	143.68
2500 Series		26078079	m	.8	140.18
4WD		26078079	m	.8	140.18
2001-03					
1500 Series					
Std Cab, Extended Cab		26078079	m	.8	140.18
Crew Cab		15772436	m	.8	268.28
2500 Series		26078079	m	.8	140.18
2500 HD Series		15772436	m	.8	268.28
3500 Series		15772436	m	.8	268.28
25 **Bolt, Upr Shaft Coupling**		26030302			3.65
26 **Nut, Coupling Shaft**		15017238			3.65
27 **Bolt, Lwr Shaft Coupling**		26046722			3.68
28 **Seal, Strg Column**	99-00	15724131	m		23.12
	01-03	15174985	m		24.27

ENGINE/TRANS

Use Procedure Explanation 12 with the following text.

GAS
4.3L ENG

R&I Engine Assy ..... m 5.6
Add to R&I Engine Assy
w/ A/C ..... m .3

Illustration Located in Next Column

1 **Pulley, Crankshaft**		10085754	m	.7	34.49
2 **Balancer**		10224885	m	1.1	61.40
3 **Cover, Timing**		12554555	m	#3.4	41.88
#Includes R&R Crankshaft Pulley, Balancer, Timing Cover Seal, Eng Oil Pan Assy					
4 **Seal, Timing Cover**		10128316	m	#1.2	11.32

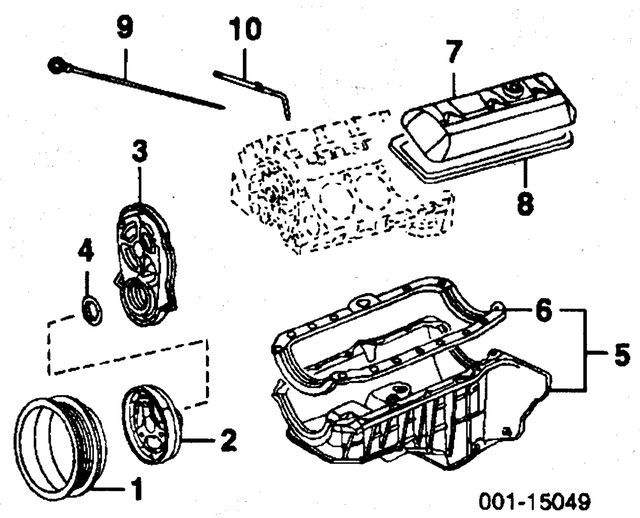

001-15049

#Includes R&R Crankshaft Pulley & Balancer

5 **Pan Assy, Engine Oil**		12555653	m	#1.6	164.91
6 **Gasket, Eng Oil Pan¶**		10220906	m	#1.6	9.39
¶Included w/Engine Oil Pan Assy					
#R&R Complete					
7 **Cover, Valve**	R/L	12554257-6	m	#.6	35.09
8 **Gasket, Valve Cover**	R/L	10201397	m	#.6	12.89
#R&R One Side Complete, R&R Both Sides 1.0					
9 **Dipstick, Eng Oil**					
Man Trans		12575437			0.00
Auto Trans		12555563			10.74
10 **Tube, Eng Dipstick**		12561672	m	.5	5.26

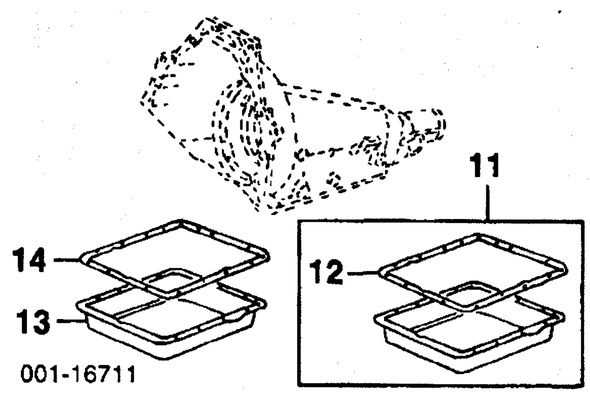

001-16711

11 **Pan Assy, Trans Oil**					
M30					
Shallow		8667545	m	#.8	21.05
Deep		24215535	m	#.8	87.72
12 **Gasket, Trans Oil Pan¶**					
M30		8654799	m	#.8	5.26
¶Included w/Trans Oil Pan Assy					
#R&R Complete					
13 **Pan, Trans Oil**					
MT1		24204278	m	#.8	70.18
14 **Gasket, Trans Oil Pan**					
MT1		8677743	m	#.8	40.35
#R&R Complete					

GAS
4.8L, 5.3L, 6.0L ENG

R&I Engine Assy
w/Man Trans ..... m 5.5
w/Auto Trans ..... m 5.8
Add to R&I Engine Assy
w/ A/C ..... m .3

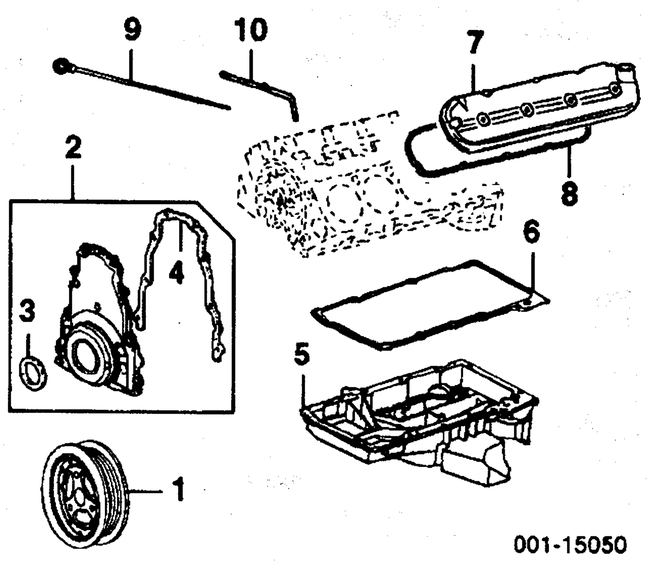

001-15050

1 **Balancer w/Pulley**	99-02	12553112	m	.8	103.46
	03	12576652	m	.8	115.79
2 **Cover Assy, Timing**		12561243	m	#3.8	65.14
#Includes R&R Balancer w/Pulley, Timing Cover Seal & Eng Oil Pan Assy, w/4 WD Add .2					
3 **Seal, Timing Cover¶**		12561244	m	#2.1	13.93
#Includes R&R Balancer w/Pulley					
4 **Gasket, Timing Cover¶**		12558013	m		9.18
¶Included w/Timing Cover Assy					
5 **Pan Assy, Eng Oil**	99-02	12560393	m	#1.8	192.98
	03	12573695	m	#1.8	273.68
6 **Gasket, Eng Oil Pan¶**		12558760	m	#1.8	28.60
¶Included w/Engine Oil Pan Assy					
#R&R Complete, w/4 WD Add 2.3, Includes R&I Carrier Housing Assy					
7 **Cover, Valve**	R	12561818	m	#.7	58.30
	L	12561820	m	#.7	58.30
8 **Gasket, Valve Cover**	R/L	12560696	m	#.7	7.56
#R&R One Side Complete, R&R Both Sides 1.2					
9 **Dipstick, Eng Oil**					
1999-00		12558684			4.91
2001					
1st Design (Stamped 12558684)		12558684			4.91
2nd Design (Stamped 12570459)		12570459			10.53
2002		12570459			10.53
2003		12574888			35.09
10 **Tube, Eng Dipstick**		12563918	m	.5	13.60

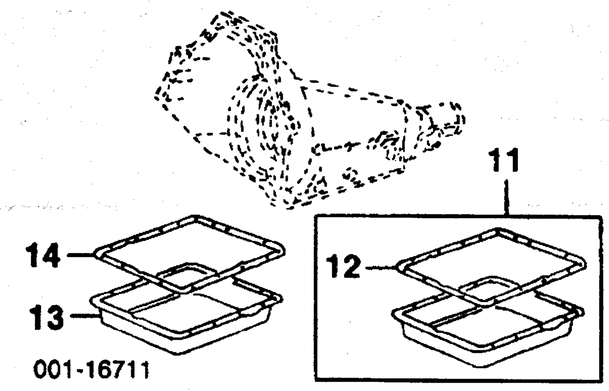

001-16711

11 **Pan Assy, Trans Oil**					
M30					
Shallow		8667545	m	#.8	21.05
Deep		24215535	m	#.8	87.72
12 **Gasket, Trans Oil Pan¶**					
M30		8654799	m	#.8	5.26
¶Included w/Trans Oil Pan Assy					
#R&R Complete					
13 **Pan, Trans Oil**					
MT1		24204278	m	#.8	70.18
14 **Gasket, Trans Oil Pan**					
MT1		8677743	m	#.8	40.35
#R&R Complete					

GAS
8.1L ENG

R&I Engine Assy
w/Man Trans ..... m 5.5
w/Auto Trans ..... m 5.8
Add to R&I Engine Assy
w/ A/C ..... m .3

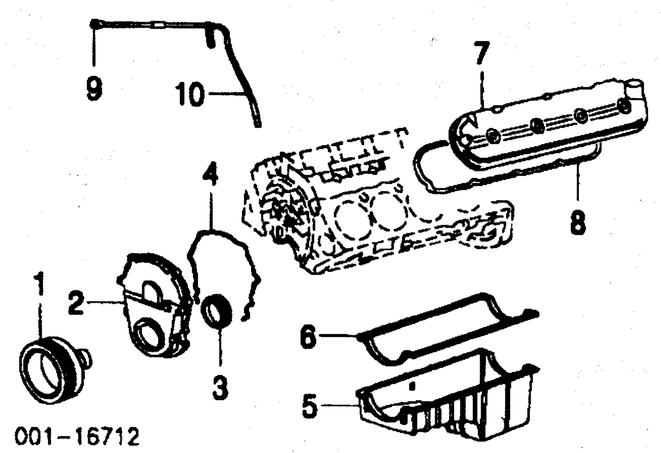

001-16712

1 **Balancer**		12552283	m	#.8	125.89
#Included in R&R Timing Cover					
2 **Cover, Timing**		12566113	m	#3.8	51.46
#Includes R&R Balancer, Timing Cover Seal, w/4 WD Add .2					
3 **Seal, Timing Cover**		12559279	m	#2.1	9.79
#Includes R&R Balancer					
4 **Gasket, Timing Cover**		12556370	m		5.28
5 **Pan, Eng Oil**		12574833	m	#1.8	157.89
6 **Gasket, Oil Pan**		12567777	m	#1.8	13.16
#R&R Complete, w/4 WD Add 2.3, Includes R&I Carrier Housing Assy					
7 **Cover, Valve**	R/L	12570482	m	#.7	48.72
8 **Gasket, Valve Cover**	R/L	12559597	m	#.7	15.26
#R&R One Side Complete, R&R Both Sides 1.2					
9 **Dipstick, Eng Oil**	01-02	12556281			8.98
	03	12575123			0.00
10 **Tube, Eng Dipstick**	01	12565644	m	.5	17.54
	02-03	12570590	m	.5	23.68

Illustration Located in Next Column

11 **Pan, Trans Oil**		29536524	m	#.8	74.30
12 **Gasket, Trans Oil Pan**		29536526	m	#.8	51.53
#R&R Complete					

Procedure Explanation Pages Must Be Used with the Above Text for an Accurate Damage Report.
Comments or suggestions? Need assistance? Call 1-800-854-7030 or 858-578-6550. Ext. 8220. Fax 1-888-256-7969 or 858-549-0629.

ENGINE/TRANS Cont'd

GAS
8.1L ENG Cont'd

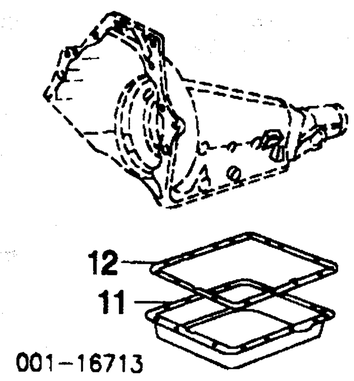

DIESEL
6.6L ENG TURBO

R&I Engine Assy
Man Trans ..... m 6.5
Auto Trans ..... m 7.3
Add to R&I Engine Assy
w/ A/C ..... m .6

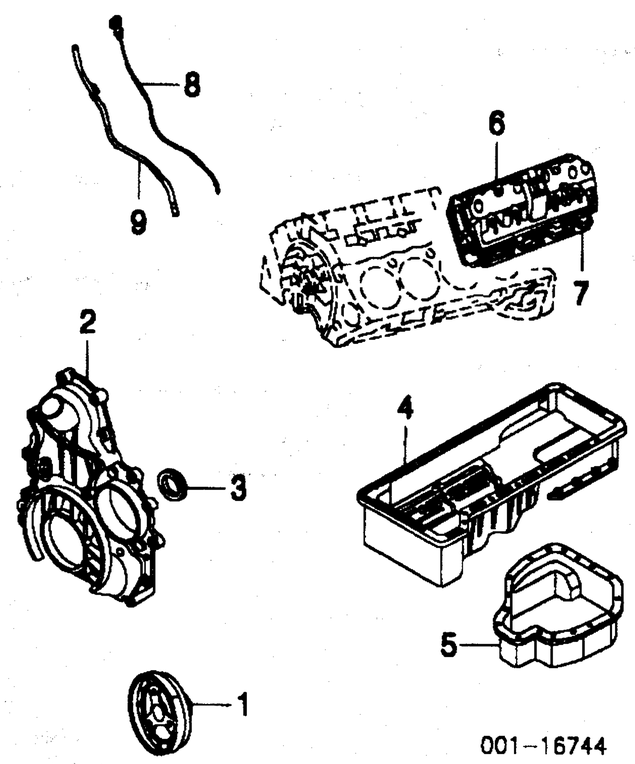

1 **Balancer**	97225896	m	#2.5	182.46
#Includes R&R Fan Shroud & Right Front Fender Apron				
2 **Cover, Timing**	97225443	m	#5.0	298.25
#Includes R&I/R&R Balancer, Timing Cover Seal & Water Pump				
3 **Seal, Timing Cover**	97209341	m	#3.0	34.56
#Includes R&R Balancer				
4 **Pan, Upr Eng Oil**				
2001				
Man Trans	97222270	m	#8.1	321.00
Auto Trans	97222270	m	#7.4	321.00
2002-03				
Man Trans	97307344	m	#8.1	321.00
Auto Trans	97307344	m	#7.4	321.00
#Includes R&I/R&R Lower Eng Oil Pan, w/4 WD Add 3.8				
5 **Pan, Lwr Eng Oil**	97220006	m	2.0	75.23
6 **Cover, Valve**				
Upper R	97223559	m	#3.8	91.37
L	97223559	m	#5.8	91.37
#R&R Both 7.8				
Lower R	97223425	m	#4.6	91.37
L	97223425	m	#5.8	91.37
#Includes R&R Upper Cover, R&R Both Sides 8.8				
7 **Gasket, Valve Cover** R/L	97188896	m		110.91
8 **Dipstick, Eng Oil**	97287502			28.26
9 **Tube, Eng Dipstick**	97221961	m	.5	37.89
Pump, Fuel Injection	97720662	m	5.4	R824.56

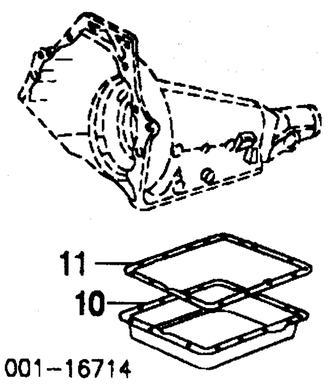

10 **Pan, Trans Oil**	29536524	m	#.8	74.30
11 **Gasket, Trans Oil Pan**	29536526	m	#.8	51.53
#R&R Complete				

ENGINE/TRANS MOUNTS

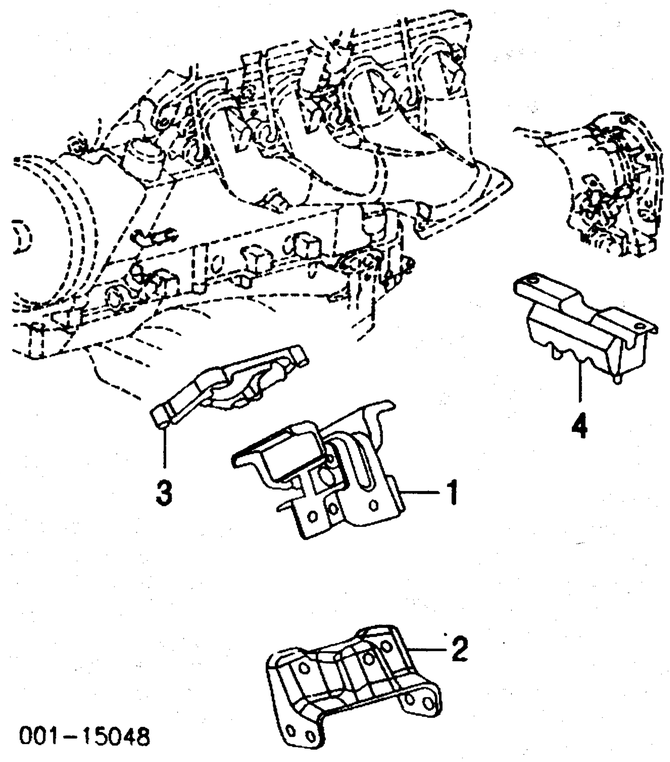

1 **Mount, Front Eng**				
Gas				
4.3L Eng				
Man Trans	R/L 15065870	#1.0	0.00
Auto Trans	R/L 15065869	#1.0	61.40
#R&R Both 1.6			
4.8L, 5.3L Eng			
2WD	99 R/L 15041508	#1.3	74.98
	00-03 R/L 15743846	#1.3	74.98
4WD	R/L 15041508	#1.3	74.98
6.0L Eng			
1500 Series			
Std Cab, Extended Cab	R/L 15041508	#1.3	74.98
Crew Cab	R/L 15036533	#1.3	74.98
2500, 3500 Series	R/L 15036533	#1.3	74.98
8.1L Eng	R/L 15761271	#1.3	105.26
#R&R Both 2.2, Right Side w/2 WD Add .3			
Diesel	01 R 15072626	#1.6	74.98
	L 15058252	#1.6	74.98
	02-03 R 15072626	#1.6	74.98
	L 15058252	#1.6	74.98
#R&R Both 2.8			
2 **Bracket, Eng Mount**			
Gas			
4.3L Eng			
2WD	R 15753409	#.2	26.60
	L 15753410	#.2	35.09
4WD	R 15753409	#.2	26.60
	L 15753411	#.2	43.86
4.8L Eng			
2WD	R/L 15036523-4	#.2	62.67
4WD	R 15036523	#.2	62.67
	L 15036525	#.2	62.67
5.3L Eng			
2WD			
1500 Series	R/L 15036523-4	#.2	62.67
2500 Series	R 15036526	#.2	80.19
	L 15036527	#.2	55.56
4WD			
1500 Series	R 15036523	#.2	62.67
	L 15036525	#.2	62.67
2500 Series	R/L 15036530-29	#.2	59.67
6.0L Eng			
2WD			
1500 Series			
Std Cab, Extended Cab	R 15036523	#.2	62.67
	L 15036525	#.2	62.67
Crew Cab	R/L 15036530-29	#.2	59.67
2500 Series	R 15036526	#.2	80.19
	L 15036527	#.2	55.56
2500 HD, 3500 Series	R/L 15036530-29	#.2	59.67
4WD			
1500 Series	R 15036523	#.2	62.67
	L 15036525	#.2	62.67
2500, 3500 Series	R/L 15036530-29	#.2	59.67
8.1L Eng	R 15045896	#.2	43.86
	L 15045895	#.2	35.09
Diesel	R 15031702	#.2	43.86
	L 15031701	#.2	35.09
3 **Bracket, Eng Spacer**			
4.3L Eng			
2WD	R/L 15732464-3	#.2	17.54
4WD	R/L 15732464	#.2	17.54
#w/Eng Mount Removed			
4 **Mount, Rear Trans**			
2WD			
Gas			
4.3L Eng			
Man Trans	15761786	.6	35.09
Auto Trans	99 22201140	.6	52.63
	00-03 15768333	.6	35.09
4.8L Eng			
Man Trans			
MG5	15761786	.6	35.09
MW3	22201140	.6	52.63
Auto Trans	99 22201140	.6	52.63
	00-03 15768333	.6	35.09
5.3L, 6.0L Eng	22201140	.6	52.63
8.1L Eng			
Man Trans	22201140	.6	52.63
Auto Trans	15068560	.6	35.09
Diesel			
Man Trans	22201140	.6	52.63
Auto Trans	15068560	.6	35.09
4WD	15683966	.6	35.09

AIR CLEANER

GAS
4.3L ENG

R&I Air Cleaner ..... m .3

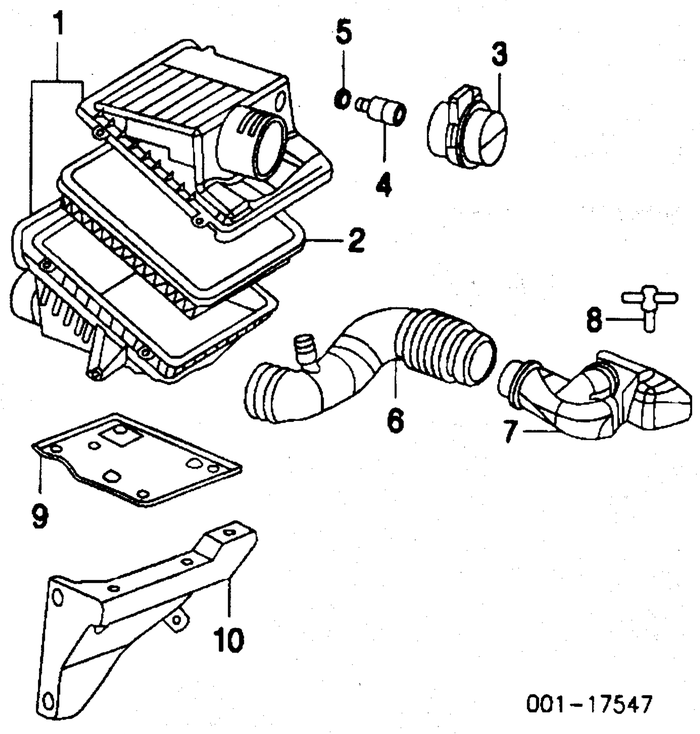

1 **Cleaner, Air**				
w/High Capacity (RPO-K47)	88894277	m	.3	226.32
w/o High Capacity (RPO-K47)	88894276	m	.3	226.32
2 **Element, Air Cleaner**				
w/High Capacity (RPO-K47)	25313349		#.3	■0.00
w/o High Capacity (RPO-K47)	25313348		#.3	■0.00
#Included in R&R Air Cleaner				
3 **Sensor, Air Flow**	25318411	m	.3	■132.32
4 **Sensor, Air**				
1999-00				
w/High Capacity (RPO-K47)	25176529	m	.2	12.37
w/o High Capacity (RPO-K47)	25164202	m	.2	12.37
2001-03	15073765	m	.2	12.37
5 **Grommet, Sensor**	25178714			3.68
6 **Duct, Outlet**	25176891		.3	28.95
7 **Resonator**	25316919		.2	77.46
8 **Nut, Wing**	15994910			2.04
9 **Bracket, Lwr Air Cleaner**	15735435		#.1	8.63
#w/Air Cleaner Removed				
10 **Support, Air Cleaner**	15066121		#.2	53.68
#w/Air Cleaner Removed, Includes R&R Lower Bracket				

GAS
4.8L, 5.3L, 6.0L, 8.1L ENG

R&I Air Cleaner ..... m .3

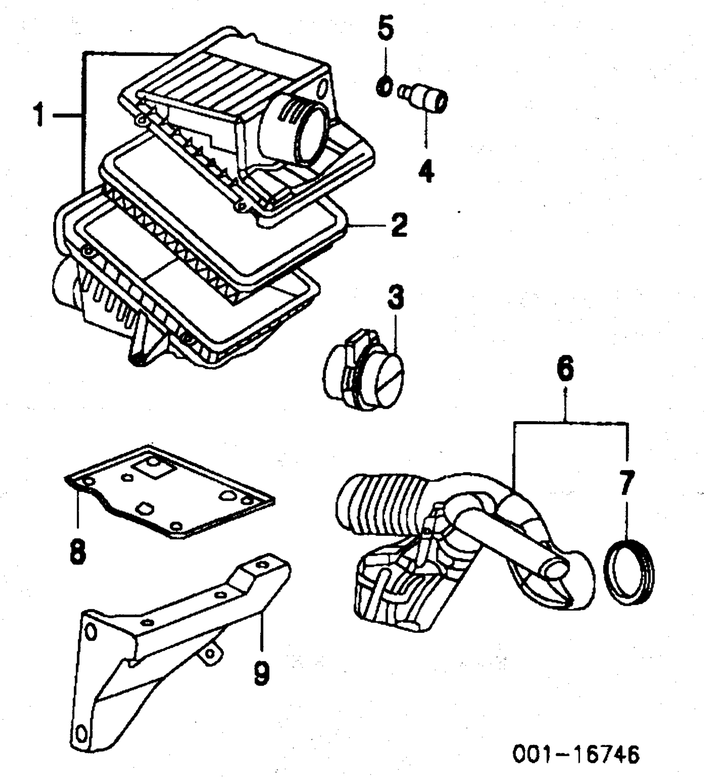

1 **Cleaner, Air**				
w/High Capacity (RPO-K47)	88894277	m	.3	226.32
w/o High Capacity (RPO-K47)	88894276	m	.3	226.32
2 **Element, Air Cleaner**				
w/High Capacity (RPO-K47)	25313349		#.3	■0.00
w/o High Capacity (RPO-K47)	25313348		#.3	■0.00
#Included in R&R Air Cleaner				

Labor Times Shown are for Replacement with New OEM Undamaged Parts on New Undamaged Vehicles.
Comments or suggestions? Need assistance? Call 1-800-854-7030 or 858-578-6550. Ext. 8220. Fax 1-888-256-7969 or 858-549-0629.

3 **Sensor, Air Flow**	25318411	m	.3	■132.32
4 **Sensor, Air**				
1999-00				
w/High Capacity (RPO-K47)	25176529	m	.2	12.37
w/o High Capacity (RPO-K47)	25164202	m	.2	12.37
2001-03	15073765	m	.2	12.37
5 **Grommet, Sensor**	25178714			3.68
6 **Duct Assy, Outlet**				
4.8L, 5.3L Eng	15769060		.3	51.84
6.0L Eng				
Chevrolet	15769060		.3	51.84
GMC				
Sierra	15769060		.3	51.84
Sierra C3, Sierra Denali	15060999		.3	51.84
8.1L Eng	15059110		.3	35.09
7 **Seal, Outlet Duct¶**	25180042			5.37
¶Included w/Outlet Duct Assy				
8 **Bracket, Lwr Air Cleaner**	15735435		#.1	8.63
#w/Air Cleaner Removed				
9 **Support, Air Cleaner**	15066121		#.2	53.68
#w/Air Cleaner Removed, Includes R&R Lower Bracket				

DIESEL 6.6L ENG TURBO

R&I Air Cleaner Assy ..... m .3

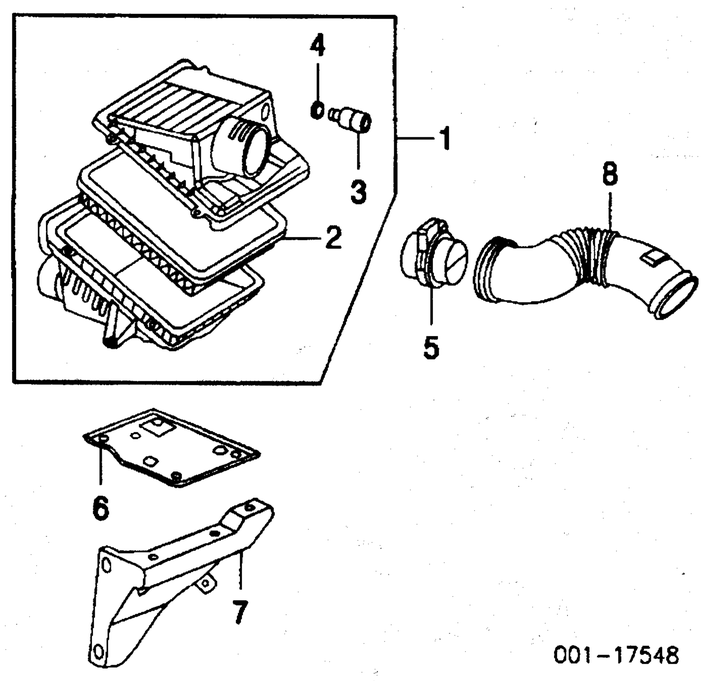

001-17548

1 **Cleaner Assy, Air**	01 88938460		.3	226.32
	02-03 25345138		.3	226.32
2 **Element, Air Cleaner¶**	25332443		#.3	■0.00
#Included in R&R Air Cleaner				
3 **Sensor, Air¶**	01 25335900	m	.2	12.37
	02 25342295	m	.2	12.37
	03 15073765	m	.2	12.37
4 **Grommet, Sensor¶**	25178714			3.68
¶Included w/Air Cleaner Assy				
5 **Sensor, Air Flow**	88892543	m	.3	■200.00
6 **Bracket, Lwr Air Cleaner**	15735435		#.1	8.63
#w/Air Cleaner Removed				
7 **Support, Air Cleaner**	15066121		#.2	53.68
#w/Air Cleaner Removed, Includes R&R Lower Bracket				
8 **Duct, Air Cleaner**	25317473		.3	35.09

TURBOCHARGER/INTERCOOLER

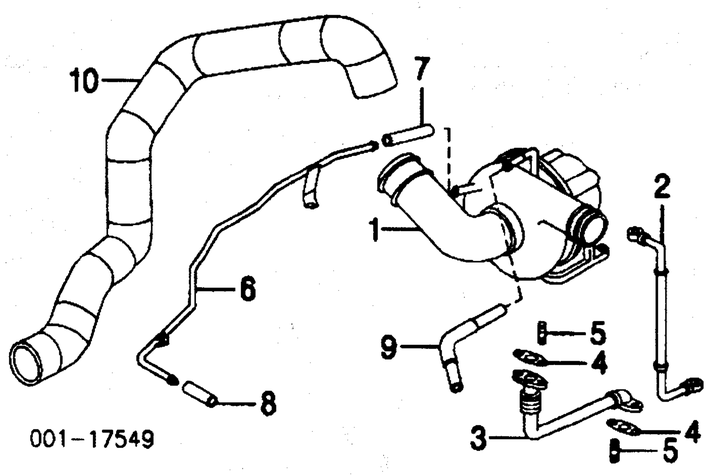

001-17549

1 **Turbocharger**				
2001	97720447	m	#5.3	2244.49
2002-03				
w/Calif Emission	97720749	m	#5.3	R2244.49
w/o Calif Emission	97720748	m	#5.3	R2244.49
#Includes R&R Oil Return Pipe				
2 **Hose, Turbo Oil Feed**	97188654	m	.9	81.14
3 **Pipe, Oil Return**	97239132	m	5.3	37.30
4 **Gasket, Oil Return Pipe**	97208191	m		1.04
5 **Stud, Oil Return Pipe**	94010603			1.63
Intercooler, Turbo	15020380	m	#1.7	434.95
#w/Radiator Removed				
Brkt, Intercooler	15751409			3.68
6 **Pipe, Cooling Feed**	01 97230496	m	.6	18.16
	02 97230093	m	.6	13.28
7 **Hose, Front Feed Pipe**	94002821	m	1.0	13.28
8 **Hose, Rear Feed Pipe**	94002870	m	1.0	52.63
9 **Hose, Cooling Return**	97230093	m	1.6	13.28
Duct, Intercooler Inlet	01-02 15040102	m	.8	244.60
	03 15061708	m	.8	244.60
10 **Duct, Intercooler Outlet**	01 15040101	m	.8	273.68
	02-03 15743615	m	.8	278.95

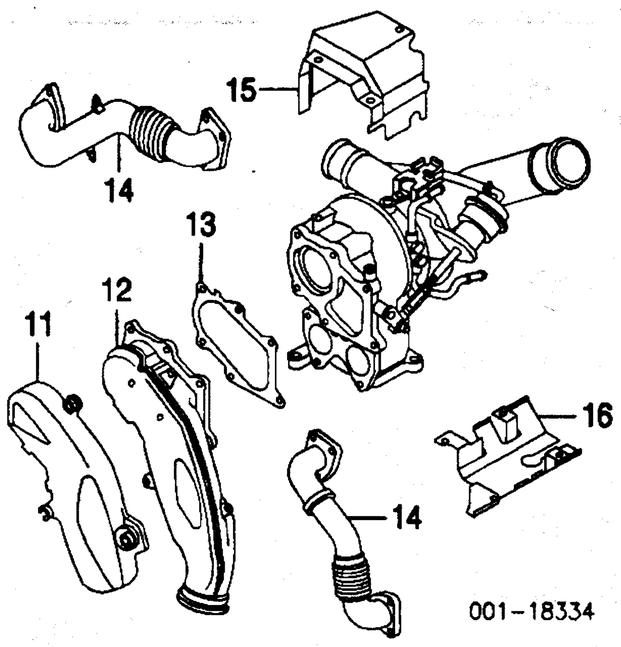

001-18334

11 **Shield, Turbo Exhaust Pipe**				
2001	97223943	m		205.47
2002				
w/Calif Emission	97246903	m		205.47
w/o Calif Emission				
Federal Tier 1	97223943	m		205.47
Federal LEV	97246903	m		205.47
2003	97223943	m		205.47
12 **Pipe, Turbo Exhaust**				
2001	97223168	m	1.7	131.58
2002				
w/Calif Emission				
Man Trans	97223168	m	1.7	131.58
Auto Trans	97246408	m	1.7	0.00
w/o Calif Emission				
Federal Tier 1	97223168	m	1.7	131.58
Federal LEV				
Man Trans	97223168	m	1.7	131.58
Auto Trans	97246408	m	1.7	0.00
2003	97223168	m	1.7	131.58
13 **Gasket, Turbo Exhaust Pipe**				
2001	97192619	m		8.96
2002				
w/Calif Emission	97254688	m		24.63
w/o Calif Emission				
Federal Tier 1	97192619	m		8.96
Federal LEV	97254688	m		24.63
2003	97192619	m		8.96
14 **Pipe, Inlet**	R 97223166	m		168.60
	L 97223167	m		195.60
15 **Shield, Upper Heat**	97217282	m		205.47
16 **Shield, Lower Heat**	97213508	m		205.47

EXHAUST

R&R Exhaust System Complete ..... #1.9

#Does Not Include R&R Exhaust Manifolds

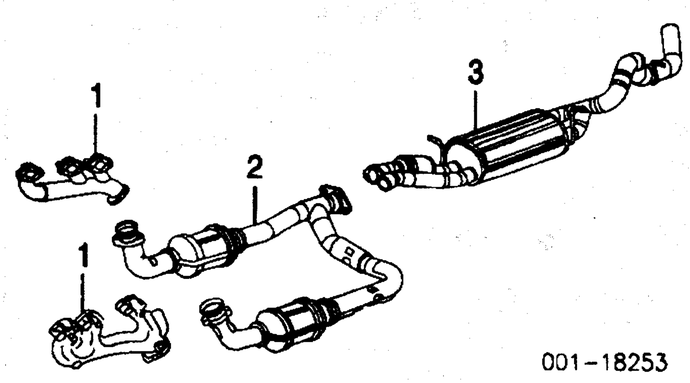

001-18253

1 **Manifold, Exhaust¶**				
Gas				
4.3L Eng				
1999-01				
Man Trans				
w/Calif Emission	R 12562408	m	1.1	172.63
	L 12563198	m	1.6	172.63
w/o Calif Emission	R 12562408	m	1.1	172.63
	L 12575342	m	1.6	172.63
Auto Trans				
w/Calif Emission	R 12562408	m	1.1	172.63
	L 12563198	m	1.6	172.63
w/o Calif Emission	R 12574320	m	1.1	157.33
	L 12575342	m	1.6	172.63
2002	R 12574320	m	1.1	157.33
	L 12575342	m	1.6	172.63
2003	R 12574320	m	1.1	157.33
	L 12574406	m	1.6	0.00
4.8L, 5.3L Eng	99-02 R 12564161	m	1.3	172.63
	L 12571679	m	1.3	172.63
	03 R/L 12562236-5	m	1.3	172.63
6.0L Eng	99-02 R 12564157	m	1.3	172.63
	L 12571678	m	1.3	172.63
	03 R/L 12562236-5	m	1.3	172.63
8.1L Eng	R/L 12557286-7	m	1.6	867.37
Diesel	R 97224586	m	.9	204.72
	L 97224587	m	1.1	166.07
Pipe, Front Exhaust¶				
Gas				
4.3L, 4.8L, 5.3L Eng-Serviced w/Catalytic Converter w/Pipe				
6.0L, 8.1L Eng				
1999-01-Serviced w/Catalytic Converter w/Pipe				
2002				
Right	15013592		#1.1	183.16
Left-Serviced w/Catalytic Converter w/Pipe				
2003				
Right	15077752		#1.1	0.00
Left-Serviced w/Catalytic Converter w/Pipe				
Diesel	15068671		#1.1	168.42
#Included in R&R Catalytic Converter				
2 **Converter w/Pipe, Catalytic¶**				
1999-00				
4.3L, 4.8L, 5.3L Eng				
w/Calif Emission	15756278		1.1	902.00
w/o Calif Emission	15036169		1.1	523.00
6.0L Eng	15755166		1.1	857.14
2001				
4.3L, 4.8L, 5.3L Eng				
w/Calif Emission	15756278		1.1	902.00
w/o Calif Emission	15052911		1.1	606.00
6.0L, 8.1L Eng	15013584		1.1	735.00
2002				
4.3L, 4.8L, 5.3L Eng				
w/Calif Emission	15079086		1.1	1118.00
w/o Calif Emission	15052911		1.1	606.00
6.0L, 8.1L Eng				
w/Calif Emission	R 15013583		1.1	1273.00
w/o Calif Emission	L 15070427		1.1	453.00
2003				
4.3L, 4.8L, 5.3L Eng	15052911		1.1	606.00
6.0L, 8.1L Eng	L 15077755		1.1	0.00
3 **Muffler¶**				
Gas				
4.3L Eng				
6-1/2 Foot Bed	15091097		.7	338.60
8 Foot Bed	99-01 15040397		.7	398.95
	02-03 15091098		.7	383.16
4.8L, 5.3L Eng				
Std Cab				
6-1/2 Foot Bed	99-00 15046279		.7	555.79
	01 15756778		.7	398.95
	02-03 15091101		.7	383.16
8 Foot Bed	99-00 15046280		.7	555.79
	01 15756779		.7	398.95
	02-03 15091102		.7	477.89
Extended Cab				
6-1/2 Foot Bed	99-01 15756781		.7	445.26
	02-03 15091104		.7	383.16
8 Foot Bed	99-01 15756782		.7	649.47
	02-03 15091105		.7	383.16
6.0L Eng				
Std Cab	99-00 15061589		.7	775.00
	01-02 15013600		.7	1174.00
	03 15077788		.7	854.29
Extended Cab	99-00 15762920		.7	775.00
	01-02 15013604		.7	1217.00
	03 15077790		.7	854.29
Crew Cab				
6-1/2 Foot Bed	99-02 15013601		.7	1088.00
	03 15077761		.7	854.29
8 Foot Bed	99-02 15013603		.7	1113.00
	03			
8.1L Eng				
Std Cab				
6-1/2 Foot Bed	15729074		.9	986.00
8 Foot Bed	15013597		.9	1051.00
Extended Cab				
6-1/2 Foot Bed	15013601		.9	1088.00
8 Foot Bed	15013604		.9	1217.00
Crew Cab				
6-1/2 Foot Bed	15013601		.9	1088.00
8 Foot Bed	15013603		.9	1113.00
Diesel				
Std Cab	15080242		.9	713.68
Extended Cab				
6-1/2 Foot Bed	15080243		.9	713.68
8 Foot Bed	15080244		.9	713.68
Crew Cab				
6-1/2 Foot Bed	15080245		.9	713.68
8 Foot Bed	15080246		.9	798.77
Tailpipe¶				
Gas				
4.3L, 4.8L, 5.3L Eng	15149600		.7	163.16
6.0L Eng	15149601		.7	d132.99
¶Order by Application				

EMISSION SYSTEM

Pump, Air				
4.3L Eng	99-00 15022543	m	.8	319.20
	01 12568324	m	.8	181.15
	02-03 N.A.	m	.8	0.00
4.8L, 5.3L Eng	99-01 15022543	m	.8	319.20
	02-03 N.A.	m	.8	0.00
8.1L Eng	01 12568324	m	.8	181.15
	02-03 N.A.	m	.8	0.00
Canister, Vapor¶	17113540	m	#.3	■66.44
¶Order by Application				
#Includes R&R Canister Bracket				
Bracket, Canister	15763616			3.68
Module, Powertrain Control				
1999-00				
4.3L Eng	16263494	m	1.0	R319.20
4.8L, 5.3L, 6.0L Eng	9354896	m	1.0	R192.46
2001-02				
Gas	99-02 12200411	m	1.0	R227.26
	03 12576106	m	1.0	770.00

EMISSION SYSTEM Cont'd

Diesel	01	9388505	m	1.0	1052.63
	02-03	12210729	m	1.0	0.00
Bracket, Module					
1999-00					
4.3L Eng		15706954		#.1	9.84
4.8L, 5.3L, 6.0L Eng		15047570		#.1	9.00
2001-03					
Gas		15047570		#.1	9.00
Diesel		15038046		#.1	8.74
#w/Module Removed					
Cover, Module					
Gas		15071609			■7.25
Diesel		15038047			■8.23
Valve, EGR					
4.3L Eng		12568582	m	.5	■193.07
4.8L, 5.3L Eng	99-01	17113615	m	.5	■183.87
	02	12568582	m	.5	■193.07
	03	N.A.	m	.5	0.00
6.0L Eng¶	99-01	17113615	m	.5	■183.87
	02	12568582	m	.5	■193.07
	03	N.A.	m	.5	0.00
8.1L Eng		88894013	m	.5	■215.84
¶Order by Application					
Sensor, Oxygen					
Front					
4.3L Eng					
RPO-L35	R/L	25315809	m	.5	85.97
RPO-LU3	00-02 R/L	12562943	m	.5	81.88
	03 R/L	25333812	m	.5	111.72
4.8L, 5.3L Eng¶	99-02 R/L	25315809	m	.5	85.97
	03 R/L	25333812	m	.5	111.72
6.0L Eng¶	99-00 R/L	25315814	m	.5	85.97
	01-02 R/L	12565397	m	.5	111.72
	03 R/L	25333812	m	.5	111.72
8.1L Eng	R	12565397	m	.5	111.72
	L	12565415	m	.5	111.72
Rear					
4.3L Eng					
RPO-L35	R	25312201	m	.5	111.72
	L	25312201	m	.4	111.72
RPO-LU3	00-02 R	12562943	m	.5	81.88
	L	12562943	m	.4	81.88
	03 R	25333812	m	.5	111.72
	L	25333812	m	.4	111.72
4.8L, 5.3L Eng¶	99-02 R	25312201	m	.5	111.72
	L	25312201	m	.4	111.72
	03 R	25333812	m	.5	111.72
	L	25333812	m	.4	111.72
6.0L Eng¶	00-02 R	25312201	m	.5	111.72
	L	25315815	m	.4	85.97
	03 R	25333812	m	.5	111.72
	L	25333812	m	.4	111.72
8.1L Eng	00-02 R	12565397	m	.5	111.72
	L	12565415	m	.4	111.72
	03 R	12572705	m	.5	111.72
	L	12572707	m	.4	111.72
¶Order by Application					
Sensor, MAP					
Gas		9359409	m	.3	■65.63
Diesel		9373269	m	.3	■94.60

ELECTRICAL

ALTERNATOR

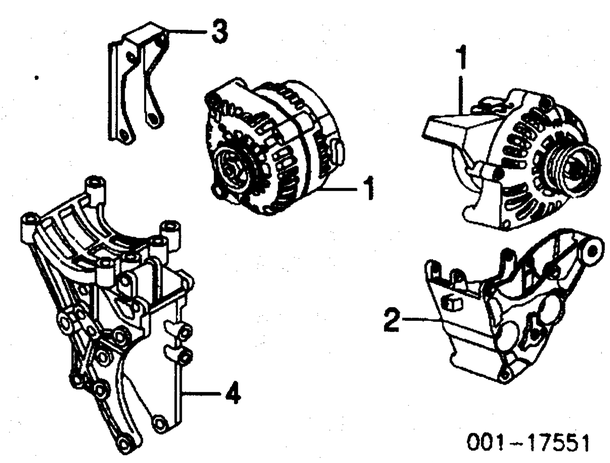

001-17551

1 **Alternator**					
105 Amp	99-02	10464438	m	.5	R224.44
	03	10464481	m	.5	R290.00
130 Amp					
New		15755900	m	.5	■396.08
Remanufactured					
1999		10464405	m	.5	R221.45
2000					
1st Design		10464405	m	.5	R221.45
2nd Design		10464443	m	.5	R267.80
3rd Design		10464453	m	.5	R267.80
2001-02		10464453	m	.5	R267.80
145 Amp		10464476	m	.5	R270.00
2 **Bracket, Alternator**					
Gas					
4.3L Eng		10236997		#.2	52.72
3 **Bracket, Aux Alternator**					
Diesel		97212348		#.2	66.25
4 **Brkt, Alt/Pwr Strg**					
Gas					
4.8L, 5.3L, 6.0L Eng		12554030		#.2	73.88
8.1L Eng	01	12558964		#.2	77.50
	02-03	12570132		#.2	74.17

Diesel¶-See A/C /Heater/Ventilation Section
¶Serviced w/Compressor Brkt
#w/Alternator Removed

BATTERY

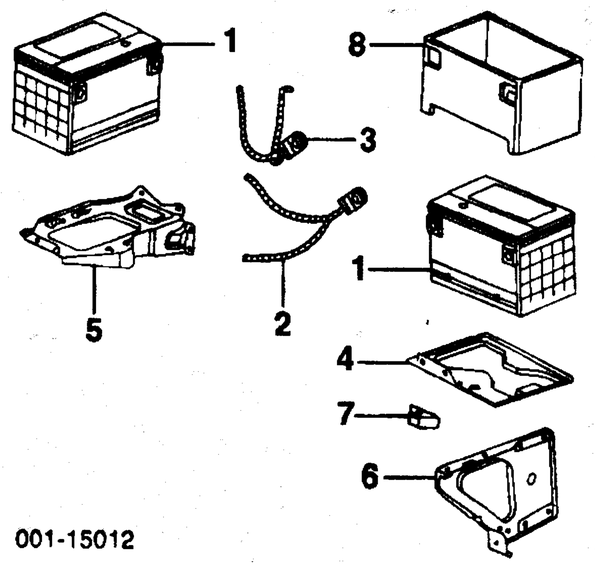

001-15012

1 **Battery**		N.A.		.4	0.00
2 **Cable, Positive Battery**					
6 Cyl					
w/12 Volt Power Supply		15321222		.6	■114.20
w/o 12 Volt Power Supply		15321248		.6	■114.20
8 Cyl					
Primary					
Gas					
4.8L, 5.3L, 6.0L Eng		15321247		.6	■114.20
8.1L Eng		15371984		.6	■57.09
Diesel		15371970		.6	■130.22
Aux					
Battery to Junction	99-01	15321214		.6	■36.43
Junction to Relay	99-01	15321215		.6	■29.47
Battery to Relay	02	15372010		.6	■36.42
Relay to Starter		15321259		.6	■42.14
3 **Cable, Negative Battery**					
6 Cyl					
w/12 Volt Power Supply		15321223		.3	■82.60
w/o 12 Volt Power Supply		15321205		.3	■66.20
8 Cyl					
Primary					
Gas					
w/12 Volt Power Supply		15321221		.3	■55.25
w/o 12 Volt Power Supply		15321212		.3	■44.35
Diesel		15372004		.3	■52.21
Aux					
Gas		15321207		.3	■38.02
Diesel		15371972		.3	■32.64
Tray, Battery					
4 Primary		15039052			17.33
5 Aux		15705102			23.42
6 **Support, Battery**	L	15705101			23.42
7 **Retainer, Battery**	R/L	356668			6.47
8 **Insulator, Battery**	R/L	10246636			14.04

HORN

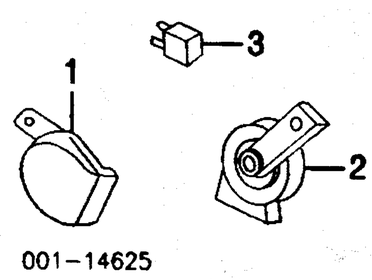

001-14625

1 **Horn, High Note**	12368061		.3	46.79
2 **Horn, Low Note**	12368062		.3	53.80
3 **Relay, Horn**	12088567	m	.3	16.69

IGNITION 4.3L ENG

Illustration Located in Next Column

1 **Distributor Assy**	99-00	1104078	m	.8	■262.56
	01-03	12570426	m	.8	■275.69
2 **Cap, Distributor¶**		10452458	m	#.6	■38.58
3 **Rotor, Distributor¶**		10452457	m	#.6	■12.69
¶Included w/Distributor Assy					
#R&R Complete					
4 **Module, Ignition Cont**		10482803	m	1.0	■122.82
5 **Coil, Ignition**		10489421	m	.5	■50.80
6 **Wire Set, Ignition**	99-00	12192188	m	1.0	■103.46
	01-03	88984266	m	1.0	■103.46

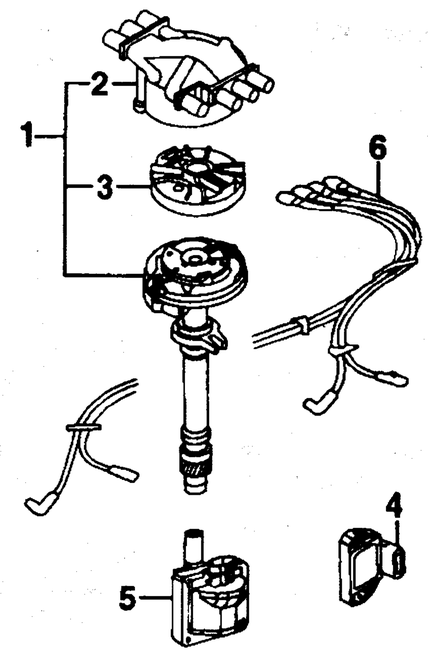

001-15011

IGNITION 4.8L, 5.3L, 6.0L ENG

R&R Ignition Coils Complete .....m .6

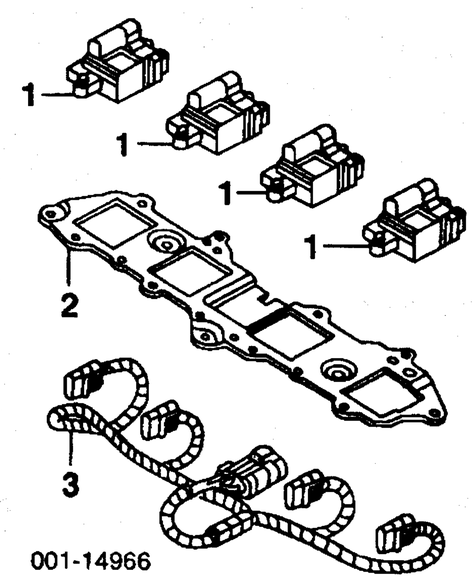

001-14966

1 **Coil, Ignition (4/Side)**					
Delphi Brand	R/L	10457730	m	#.3	■76.94
Mitsubishi	R/L	12558693	m	#.3	■45.76
#R&R Ignition Coils Complete .6					
2 **Bracket, Ign Coil**					
Delphi Brand	R/L	10457736		#.1	38.60
Mitsubishi					
1999	R/L	12560278		#.1	0.00
2000-03					
4.8L, 5.3L Eng	R/L	12563291		#.1	17.94
6.0L Eng	R/L	12569188		#.1	23.00
#w/Coils Removed					
3 **Harness, Ignition Coil¶**	R/L	12563707	m	.5	■0.00
¶Order by Application					

IGNITION 8.1L ENG

R&R Ignition Coils Complete .....m 1.5

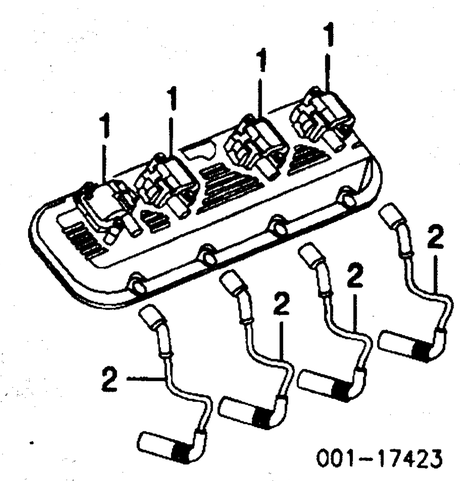

001-17423

1 **Coil, Ignition (4/Side)**	01-02 R/L	12558948	m	#.3	■59.72
	03 R/L	12558693	m	#.3	■45.76
#R&R Five or More 1.5					
2 **Wire, Ignition (4/Side)**	R/L	12192436	m		■14.90

Labor Times Shown are for Replacement with New OEM Undamaged Parts on New Undamaged Vehicles.
Comments or suggestions? Need assistance? Call 1-800-854-7030 or 858-578-6550. Ext. 8220. Fax 1-888-256-7969 or 858-549-0629.

NAVIGATION/COMMUNICATIONS SYSTEM

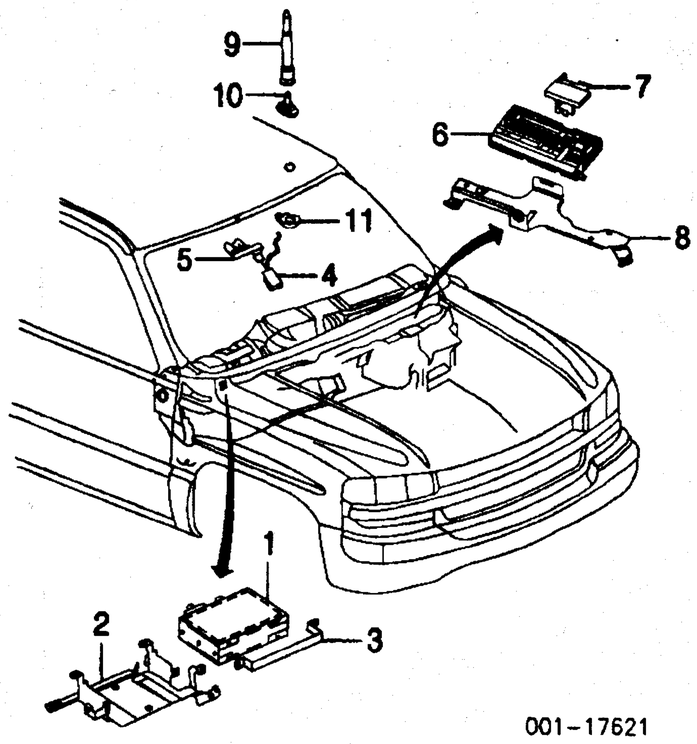

001-17621

1 **Receiver, Navigation¶**		N.A.	m	1.1	0.00
¶Serviced by ACDelco-Contact Dealer					
2 **Bracket, Receiver**	00-02	12450923			24.75
	03	N.A.			0.00
3 **Strap, Receiver**	00-02	12450733			5.37
	03	N.A.			0.00
4 **Antenna, Navigation**	00-02	12450669	m	.8	71.47
	03	N.A.	m	.8	0.00
5 **Plate, Antenna Ground**	00-02	12450760			20.67
	03	N.A.			0.00
6 **Transceiver, Telephone¶**		N.A.	m	.5	0.00
¶Serviced by ACDelco-Contact Dealer					
7 **Bracket, Upper Transceiver**	00-02	15763942			0.00
	03	N.A.			0.00
8 **Bracket, Lower Transceiver**	00-02	12450922			26.60
	03	N.A.			0.00
9 **Antenna, Telephone**	00-02	12451071		.5	23.94
	03	N.A.		.5	0.00
10 **Base, Outer Antenna**	00-02	10301362			22.42
	03	N.A.			0.00
11 **Base, Inner Antenna**	00-02	10301364			37.40
	03	N.A.			0.00

STARTER

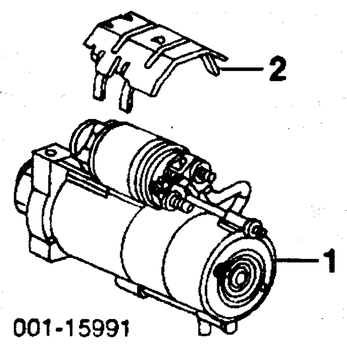

001-15991

1 **Starter**					
Gas					
4.3L Eng	99-00	10465462	m	.7	R289.58
	01-02	10465520	m	.7	R289.58
	03	10465577	m	.7	R289.58
4.8L, 5.3L Eng	99-00	10465463	m	.6	R280.32
	01	10465579	m	.6	R280.32
	02-03	10465561	m	.6	R289.58
6.0L Eng	99-01	10465385	m	.6	R281.34
	02-03	10465560	m	.6	R289.58
8.1L Eng					
2001					
ACDelco 323-485		10465167	m	.6	R280.32
ACDelco 323-1459		10465554	m	.6	R289.58
2002		10465578	m	.6	R289.58
2003		12567709	m	.6	0.00
Diesel		97720446	m	.8	R513.06
2 **Shield, Starter**					
4.3L, 4.8L, 5.3L, 6.0L Eng		12561327		#.1	16.56
8.1L Eng	01	12568900		#.1	3.54
	02-03	12569625		#.1	6.54
#w/Starter Removed					

WINDSHIELD

Use Procedure Explanation 13 with the following text.

R&I Windshield..... **#2.3**

#Includes Clean Up Old Adhesive as Necessary

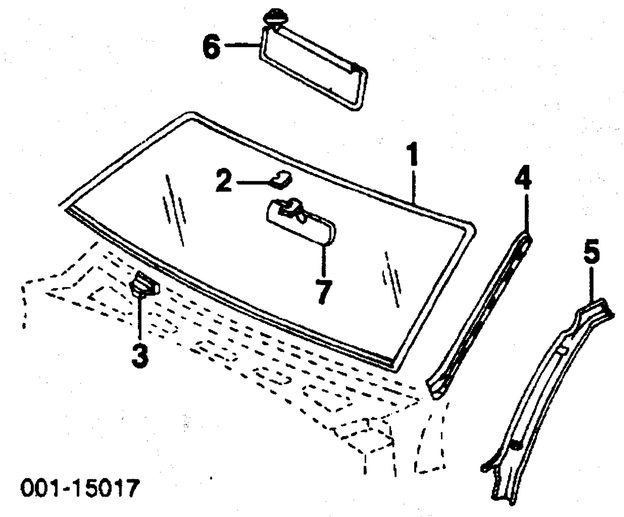

001-15017

1 **Glass, Windshield**					
Chevrolet, GMC					
Tint/Shade		15086563		#1.9	369.84
Tint	99-02	15765387		#1.9	369.84
NAGS					
Green/Blue Shade		DW01341GBY		#1.9	637.15
#Includes Clean Up Old Adhesive as Necessary					
Adhesive, Windshield		N.A.			0.00
2 **Support, Mirror**		15954649			4.98
3 **Support, Windshield**	R/L	15061964			3.39
4 **Moulding, W/S Reveal**	R/L	15770206-7		.3	24.20
5 **Moulding, Inside Garnish¶**					
Chevrolet	99-02	R/L 15073356-5		.2	24.63
	03	R/L 15073358-7		.2	25.44
GMC					
Sierra	99-02	R/L 15073356-5		.2	24.63
	03	R/L 15073358-7		.2	25.44
Sierra C3, Sierra Denali	01-02	R 15073366		.2	87.63
		L 15051432		.2	90.53
	03	R/L N.A.		.2	0.00
6 **Visor, Sun¶**					
Chevrolet	99-01	R/L 88953573		.2	72.93
	02	R/L 15069548-7		.2	72.93
	03	R 15177103		.2	0.00
		L 15074698		.2	72.93
GMC					
Sierra	99-01	R/L 88953573		.2	72.93
	02	R/L 15069548-7		.2	72.93
	03	R 15177103		.2	0.00
		L 15177100		.2	97.05
Sierra C3	01	R/L 15082941-0		.2	97.51
Sierra Denali		R/L 15069664-3		.2	97.05
¶Order by Application					
7 **Mirror, Rear View**					
w/Compass					
w/On-Star System	01-02	15762905		.2	401.19
	03	15167776		.2	423.73
w/o On-Star System	99	15033194		.2	354.41
	00-02	15067746		.2	359.59
	03	15071186		.2	423.73
w/o Compass		10078250		.2	37.12

WIPER SYSTEM

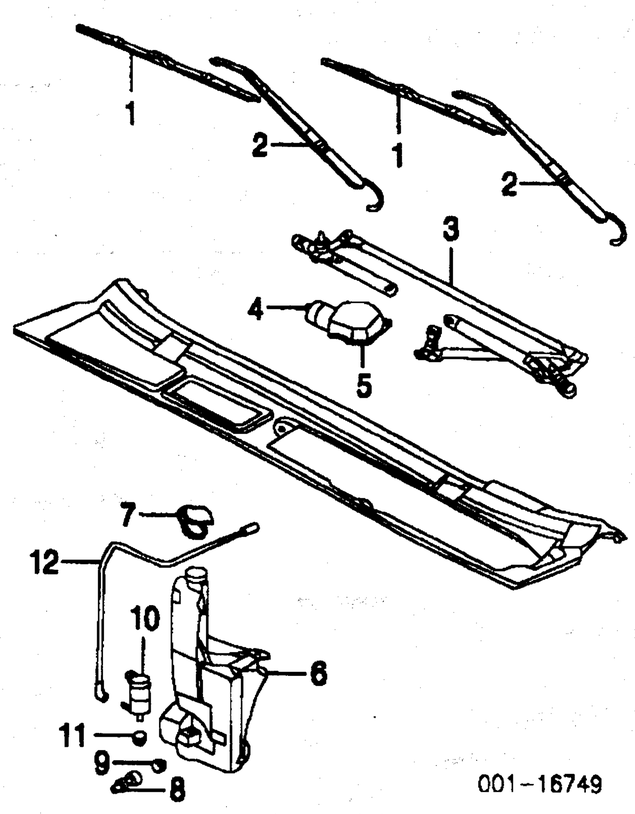

001-16749

1 **Blade, Wiper**	R/L	12368667		.1	■17.58
Insert, Wiper	R/L	12368668		.1	■8.46
2 **Arm, Wiper**	99-02	R/L 12487596-7		#.2	■16.02
	03	R 88937402		#.2	■36.00
		L 88958115		#.2	■17.90
#Includes R&I/R&R Wiper Blade or Insert					
3 **Trans, Wiper**		12365362		1.1	64.50
4 **Motor, Wiper**	99-02	12494772		#.9	■221.00
	03	88958144		#.9	■221.00
5 **Cover, Wiper Motor**	99-02	12494773		#.9	84.29
	03	88958136		#.9	128.80
#R&R Complete					
6 **Tank, Washer**					
Gas					
4.3L Eng					
w/RPO-YE9		12487670		.5	23.60
w/o RPO-YE9		12487669		.5	23.60
4.8L, 5.3L, 6.0L, 8.1L Eng		12487670		.5	23.60
Diesel		12487670		.5	23.60
7 **Cap, Tank**	99-02	12363335			5.16
	03	88958101			5.53
8 **Switch, Fluid Level**		12494846			13.49
9 **Grommet, Switch**	99	12367249			8.74
	00-03	12494847			8.74
10 **Pump, Washer**		22127653		#.5	39.75
#Includes R&R Washer Tank					
11 **Grommet, Pump**		22062337			5.19
12 **Hose, Washer Pump**		12463086			30.12

INSTRUMENT PANEL

Use Procedure Explanation 14 with the following text.

R&I Instrument Panel..... m **4.2**

NOTE 1: Under no circumstance is the magnesium Support Beam to be repaired.

NOTE 2: All Parts in this section are included in R&R Instrument Panel unless noted otherwise.

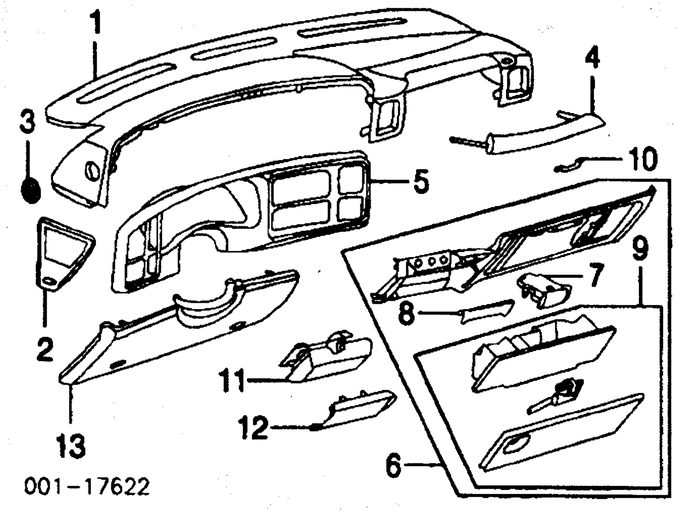

001-17622

1 **Panel, Upr Inst Trim¶**	99-02	15164912		1.2	114.74
	03	15176088		1.2	147.51
2 **Panel, Side Inst Trim¶**	99	R 15712256		.3	9.67
		L 15771388		.3	9.67
	00-01	R 15761836		.3	9.67
		L 15771388		.3	9.67
	02	R 15761836		.3	9.67
		L 15164904		.3	9.67
	03	R 15090908		.3	0.00
		L 15181772		.3	20.49
3 **Grille, Defroster¶**		R/L 15051338			3.81
4 **Handle, Assist**					
1999-02¶		15052738		#.3	37.64
2003					
Chevrolet		15170314		#.3	37.64
GMC					
Sierra		15170314		#.3	37.64
Sierra Denali		15170311		#.3	0.00
#w/Passenger Side Air Bag Removed					
5 **Bezel, Instrument¶**					
1999-02		15085844		.6	93.68
2003					
Chevrolet					
Base Model		15178710		.6	74.00
LS, LT Models		15178707		.6	74.00
GMC					
Sierra					
Sierra Denali		15055996		.6	151.58
6 **Panel Assy, Lwr Inst Trim¶**	99-02	15771371		.6	192.46
	03	15180927		.6	0.00
7 **Ashtray¶ (a)**	99-02	15713512		.2	33.33
	03	15174131		.2	33.33
8 **Door, Power Receptacle¶ (a)**	99-02	15713589			12.18
	03	N.A.			0.00
9 **Box w/Door, Glove¶ (a)**	99-02	15707423		.3	134.74
	03	15052520		.3	134.74
¶Graphite listed, Order by Application					
(a) Included w/Lower Instrument Trim Panel Assy					
10 **Striker**		15039637		.1	1.02
11 **Holder, Cup¶**					
w/o Center Console	99-01	15753266		#.5	61.95
12 **Cover, Cup Holder Opng¶**		15712261		#.5	12.77
#R&R Complete					
13 **Bolster, Driver Knee¶**	99-02	15999585		.3	91.88
	03	15180258		.3	91.88
¶Order by Application					

Illustration Located in Next Column

14 **Panel, Instrument**	99-02	15772404	m	5.9	496.93
	03	15183911	m	5.9	0.00
15 **Beam, Magnesium Support**	99-02	15087231	m	#1.0	285.98
	03	15174120	m	#1.0	0.00
#w/Instrument Panel Removed, this Component is a One Piece Die Cast Magnesium Instrument Support Panel					
16 **Defl, Driver Knee Bolster**	99-02	15034514		.4	13.98
	03	15073253		.4	13.98

INSTRUMENT PANEL Cont'd

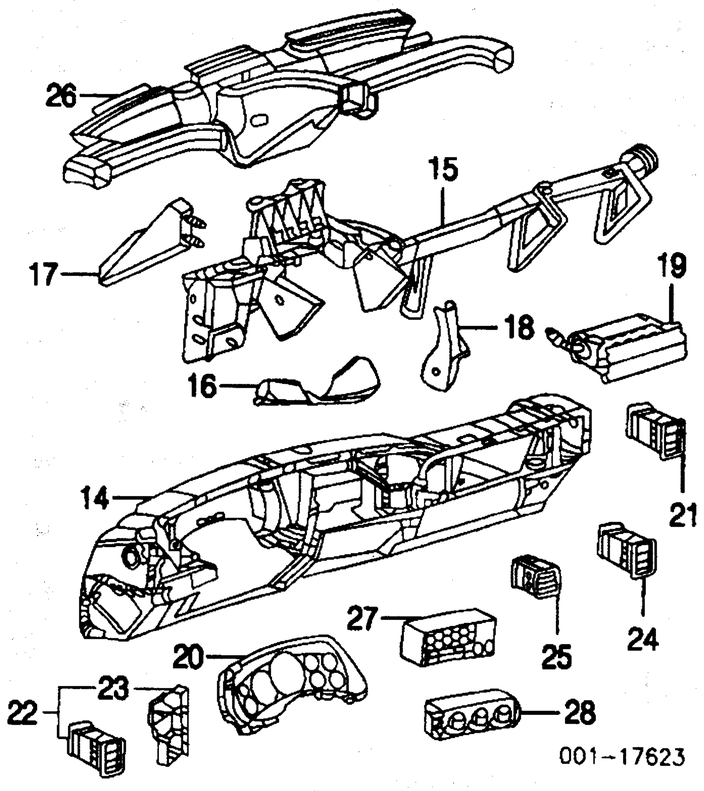

17 **Brace, Reinf**		15087207		#.4	9.61
#w/Magnesium Support Beam Removed					
18 **Bezel, Support¶**					
1999-02					
Std Cab		15035179		.3	10.65
Extended Cab					
1500, 2500		15763520		.3	10.65
3500		15035179		.3	10.65
Crew Cab		15763520		.3	10.65
2003					
Std Cab, Extended Cab		15051291		.3	10.65
Crew Cab		15763524		.3	10.65
¶Order by Application					
19 **Module, Pass Air Bag-See Air Bag System Section**					
20 **Cluster, Instrument¶**	99	9362995	m	.8	d213.77
	00	15758077	m	.8	324.30
	01-02	15055364	m	.8	300.82
	03	N.A.	m	.8	0.00
21 **Deflector, Right Otr Air¶**	99-02	15770978		.4	10.09
	03	15169326		.4	10.09
¶Order by Application					
22 **Outlet Assy, Left Otr Air**					
w/ A/C		15771300		.4	19.25
w/o A/C		15169333		.4	17.25
23 **Housing, Air Outlet (a)**		15034164		.4	9.63
(a) Included w/Left Outer Air Outlet Assy					
24 **Deflector, Right Ctr Air¶**		15061276		.4	10.09
25 **Deflector, Left Ctr Air¶**	99-02	15771394		.4	11.95
	03	15770979		.4	10.09
¶Order by Application					
26 **Duct, Air Distribution**		15770607		.3	41.26
27 **Radio¶**					
AM-FM Stereo	99-01	15769265		.9	358.80
AM-FM Stereo-Cassette		15070962		.9	583.96
AM-FM Stereo-CD					
1999-02		15071233		.9	803.36
2003		15184933		.9	810.00
AM-FM Stereo-Cassette-CD	99-02	9356819		.9	206.78
	03	15756190		.9	810.00
Receiver, Digital Radio		15176338		#.2	d0.00
#w/Upr Inst Trim Panel Removed					
28 **Control, A/C /Heater¶**	99	9361355	m	.5	111.00
	00-01	15054697	m	.5	112.68
	02	15054698	m	.5	124.86
	03	15763061	m	.5	124.86
¶Order by Application					
Display, Driver Information		15082595	m	.9	696.00

CENTER CONSOLE

Use Procedure Explanation 14 with the following text.

CHEVROLET, GMC SIERRA 1999-02

R&I Center Console	#.4
#w/Front Seat Assemblies Removed	
Add to R&I/R&R Console w/CD Player	.3

NOTE: All Parts in this section are included in R&R Compartment Assy unless noted otherwise.

Illustration Located in Next Column

1 **Compartment Assy¶**				
Std Console (RPO-D55)				
Std Cab	99-00	15050313	#.6	338.72
	01-02	15072003	#.6	321.78
Extended Cab	99-00	15050297	#.6	338.72

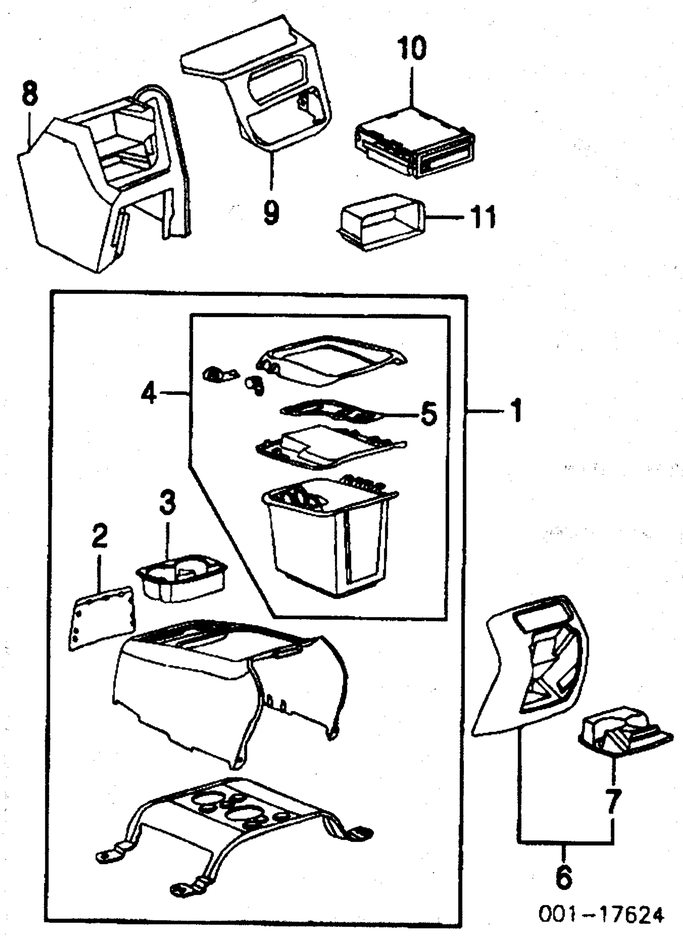

	01-02	15060444	#.6	338.72
Crew Cab		15060444	#.6	338.72
Custom Console (RPO-D07)				
Custom Console (RPO-D07)	99-00	15050305	#.6	326.32
	01-02	15060448	#.6	338.72
#w/Front Seat Assemblies Removed, Includes R&R Extension Bezel, w/CD Player Add .3				
2 **Cover, Front Console¶ (a)**				
Std Console (RPO-D55)		12476291		31.96
¶Order by Application				
3 **Holder, Front Cup (a)**		12472734	.2	58.46
4 **Cover Assy, Compartment¶ (a)**		12475016	.2	112.63
¶Order by Application				
5 **Pocket, Compartment (a) (b)**		12475017		93.95
(a) Included w/Compartment Assy				
(b) Included w/Compartment Cover Assy				
6 **Panel Assy, Rear Console**				
Std Console (RPO-D55)		12475054	.4	181.37
Custom Console (RPO-D07)	99-02	12475021	.4	171.58
7 **Holder, Rear Cup¶ (a)**		12476268	.2	90.53
¶Graphite listed, Order by Application				
(a) Included w/Rear Console Panel Assy				
8 **Extension, Front Console¶**				
Custom Console (RPO-D07)		15049177	#.4	93.42
#w/Center Console Removed, Not Included in R&R Compartment Assy				
9 **Bezel, Extension¶**		15759808	.2	28.40
¶Pewter listed, Order by Application				
10 **Player, Audio**				
CD		15752614	#.3	634.80
Cassette	00	16252315	#.3	250.80
	01-02	15068081	#.3	282.84
11 **Compartment, Extension**		15958735	#	10.00
#Included in R&R Front Console Extension, Not Included in R&R Compartment Assy				

CHEVROLET, GMC SIERRA 2003

R&I Center Console		#.4	
#w/Front Seat Assemblies Removed			
Add to R&I/R&R Console w/CD Player		.3	
Compartment¶			
w/Rear Audio Control	88986683	#.6	1368.42
w/o Rear Audio Control	88986886	#.6	569.47
#w/Front Seat Assemblies Removed, w/CD Player Add .3			
Cover, Console¶			
w/Rear Audio Control	88986665		46.18
w/o Rear Audio Control	88986666		46.18
Hinge, Cover¶	15178618		0.00
Panel, Trim¶	15178483		98.00
Bezel, Lower¶	15179662		0.00
Ashtray¶	22611384		59.09
¶Order by Application			
Player, Audio	N.A.		0.00
Holder, Cup	N.A.		0.00

GMC SIERRA C3, SIERRA DENALI 2001-02

R&I Center Console	#.4
#w/Front Seat Assemblies Removed	
Add to R&I/R&R Console w/CD Player	.3

NOTE: All Parts in this section are included in R&R Compartment Assy unless noted otherwise.

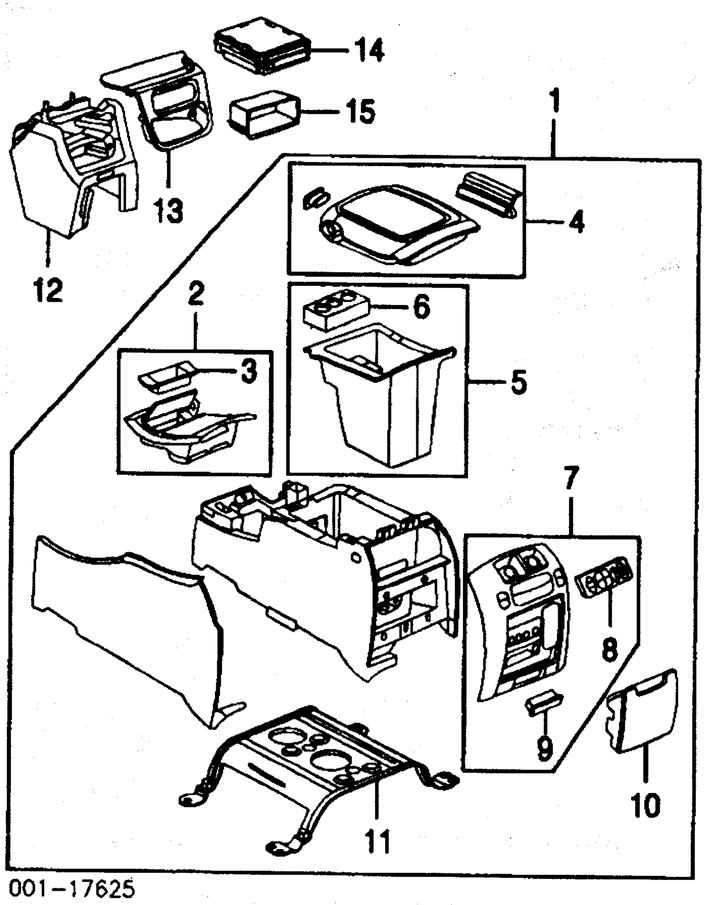

1 **Compartment Assy¶**		15753148	#.4	1193.16
¶Pewter listed, Order by Application				
#Includes R&R Extension Bezel, w/CD Player Add .3				
2 **Bezel Assy, Front (a)**		15079957	.2	420.67
3 **Ashtray (a) (b)**		15075660		37.42
(b) Included w/Front Bezel Assy				
4 **Door, Compartment¶ (a)**		88939673	#.2	569.47
5 **Box Assy, Storage¶ (a)**		88939988	#.2	92.88
¶Pewter listed, Order by Application				
#R&R Complete				
Lamp, Compartment		12450028		5.50
6 **Holder, Coin (a) (b)**		10436137		22.18
(b) Included w/Storage Box Assy				
7 **Panel Assy, Rear Trim¶ (a)**		88986049	.4	439.25
¶Pewter listed, Order by Application				
8 **Control, Rear Audio (a) (b)**		9356819		206.78
9 **Lamp, Cargo (a) (b)**		10258647		8.60
(b) Included w/Rear Trim Panel Assy				
10 **Holder, Rear Cup¶ (a)**		88934898	.2	93.96
¶Pewter listed, Order by Application				
11 **Bracket, Compartment (a)**		15034206		70.47
(a) Included w/Compartment Assy				
12 **Extension, Front Console¶**		15068124	#.4	1688.12
¶Pewter listed, Order by Application				
#w/Center Console Removed, Not Included in R&R Compartment Assy				
13 **Bezel, Extension**		15058101	.2	174.82
14 **Player, CD**		15095685	#.3	d510.38
15 **Compartment, Extension**		15958735	#	10.00
#Included in R&R Front Console Extension, Not Included in R&R Compartment Assy				

GMC SIERRA DENALI 2003

R&I Center Console	#.4
#w/Front Seat Assemblies Removed	
Add to R&I/R&R Console w/CD Player	.3

NOTE: All Parts in this section are included in R&R Compartment unless noted otherwise.

Compartment¶	88987008	#.6	1483.91
#w/Front Seat Assemblies Removed			
Bezel, Upper¶	15178631	.2	32.44
Hinge, Door¶	15168298	.2	0.00
Door, Compartment¶	N.A.		0.00
Tray, Storage¶	15178468		59.99
Panel, Trim¶	15178479	.4	0.00
Retainer, Console¶	15070566		6.99
Holder, Cup¶	N.A.		0.00
Control, Rear Audio¶	N.A.		0.00
Holder, Rear Cup¶	N.A.		0.00
¶Order by Application			
Lamp, Compartment	12450028		5.50

CAB

Use Procedure Explanations 8, 14, 15, 17, 18 and 28 with the following text.

SHEET METAL STD CAB

Refinish Roof Panel Outside	2.8
Refinish Roof Panel Inside	1.4
Refinish Plenum Panel	
Front	.8
Lower	.8
Refinish Floor Panel	1.6
Refinish Outer Rear Body Panel Outside	2.4

Labor Times Shown are for Replacement with New OEM Undamaged Parts on New Undamaged Vehicles.
Comments or suggestions? Need assistance? Call 1-800-854-7030 or 858-578-6550. Ext. 8220. Fax 1-888-256-7969 or 858-549-0629.

Refinish Outer Rear Body Panel Inside		2.4
Refinish Outer Side Body Panel	R/L	1.8
Refinish Door Opening Frame	R/L	3.0
Refinish W/S Post & Upper Hinge Pillar (Section)	R/L	1.0
Refinish Hinge Pillar (Section)	R/L	1.0
Refinish Rocker Panel (Section)	R/L	1.4
Refinish Lock Pillar (Section)	R/L	1.0
Refinish Door Opening Frame Extension	R/L	1.0
Section W/S Post & Upper Hinge Pillar	R/L	#5.5
#Includes R&R Upper Body Side Hinge		
Section Hinge Pillar	R/L	#7.5
#Includes R&R Upper & Lower Body Side Hinges		
Section Rocker Panel	R/L	#7.5
#w/Door & Necessary Trim Removed		
Section Lock Pillar	R/L	#6.5
#Does Not Include R&I/R&R Back Glass		
Add to R&R Body Side Otr Panel		
To R&I Back Glass		.4

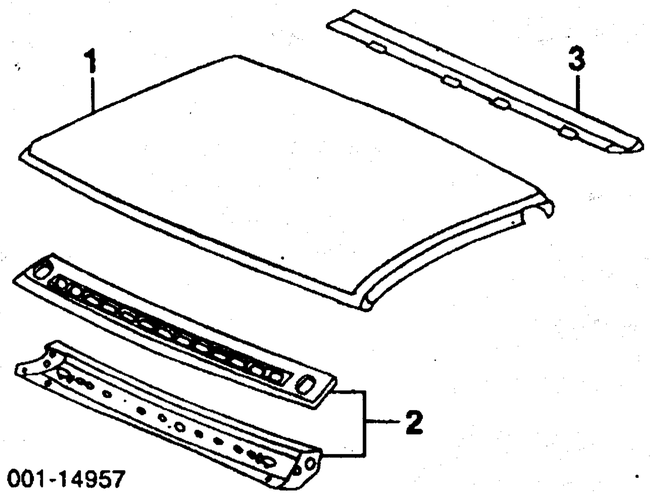

001-14957

1 **Panel, Roof**	99-02	15096839	13.0	171.86
	03	N.A.	13.0	0.00
2 **Panel, Front Header**		15759034	#1.5	53.19
3 **Panel, Rear Header**		15044141	#1.5	33.76
#w/Roof Removed				

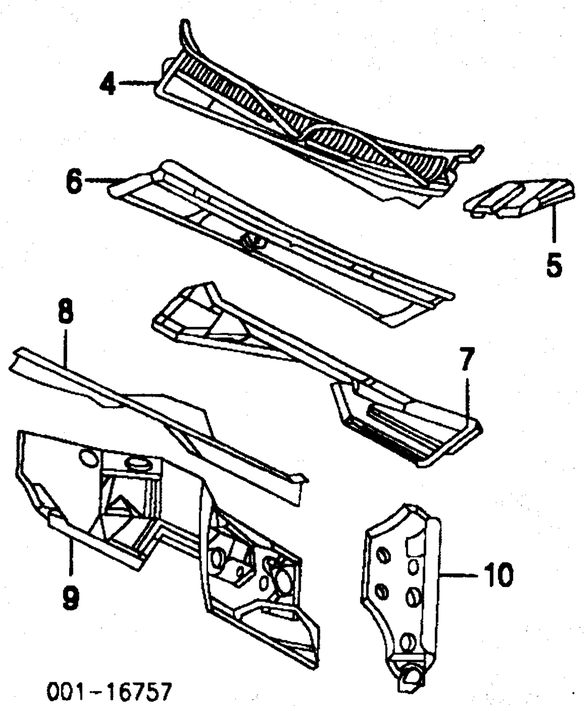

001-16757

4 **Panel, Ctr Cowl Grille**		15060065	.3	83.39
5 **Panel, Side Cowl Grille**				
Right				
w/Antenna Hole		15753702	.2	8.95
w/o Antenna Hole		15045854	.2	8.95
Left		15045455	.1	8.95
6 **Panel, Upper Plenum**		15058693		125.29
7 **Panel, Front Plenum**		15703208	5.0	54.00
8 **Panel, Lower Plenum**		15703207	5.5	117.97
9 **Panel, Dash**		15703333	14.5	88.88
10 **Panel, Side Cowl**	R	15033564	2.5	70.27
	L	15752862	2.5	60.20
Antenna				
1999-02	R	15042595	.1	21.84
2003	L	15087886	.1	22.80
Base/Cable, Antenna	99-00 R	15052357	#2.1	12.84
	01 R	15074562	#2.1	15.90
	02-03 R	15074562	#2.1	15.90
#Includes R&R Upper Instrument Trim Panel				
Ext, Cable	99-02 R	15755162		10.66
	03 R	15094673		14.88
Bracket, Antenna	R	15042317	.3	5.19

Illustration Located in Next Column

11 **Panel, Inner Rocker**	R/L	15704786-5	3.5	18.81
12 **Filler, Inr Rocker Pnl**	R/L	15704798-7	.5	3.66
13 **Panel, Floor**		15704774	#16.5	335.69
#w/Body Side Outer & Inner Panels & Outer & Inner Rocker Panels Removed				
Reinf, Floor Panel Ext	R	15704780		25.02

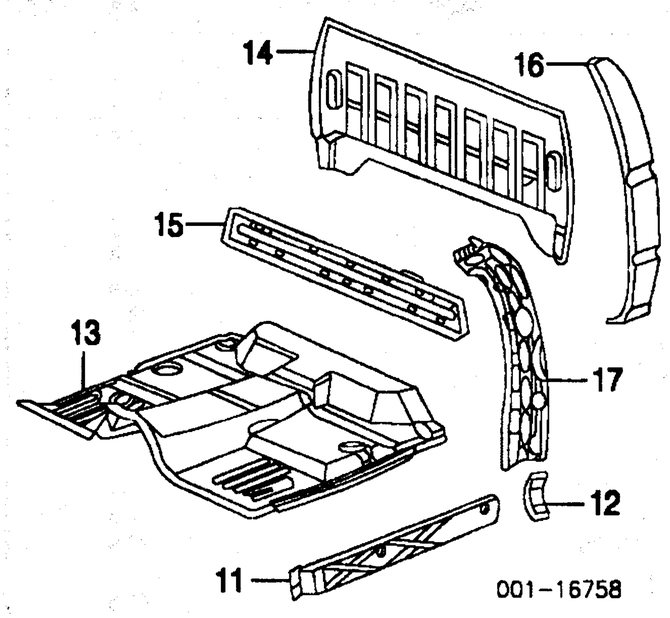

001-16758

	L	15051159		25.02
14 **Panel, Rear Outer Body**		15704907	#9.5	123.05
#w/Bed & One Body Side Outer Panel Removed, Includes R&I Seats & R&R Inner Rear Body Panel, w/Outer Side Panel Removed Deduct 4.7, Deduction Includes Common Surfaces & Included Operations				
15 **Panel, Rear Inner Body**		15753578		37.74
16 **Panel, Outer Side Body**	R	15168800	#8.5	76.88
	L	15765587	#8.5	76.88
#Includes R&R Back Glass				
17 **Panel, Side Inner Body**	R/L	15766250-1	2.5	131.39

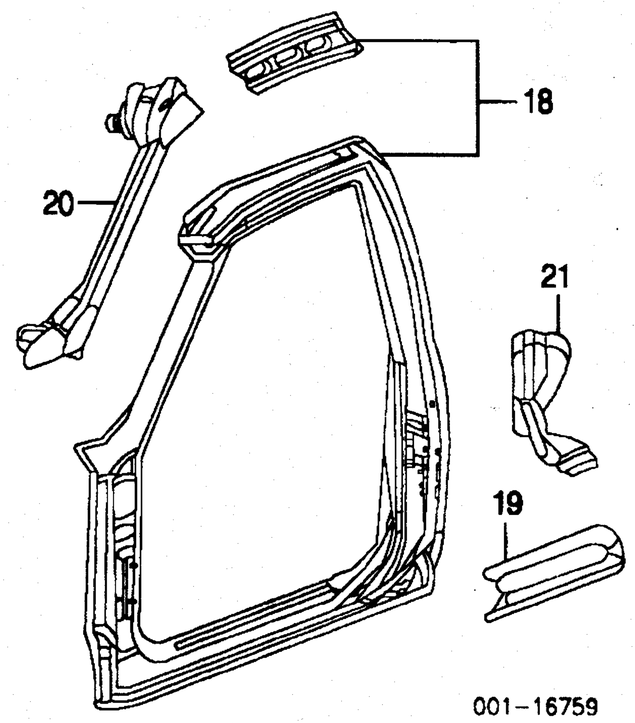

001-16759

18 **Frame, Door Opening**	R/L	12473028-7	#14.5	587.90
#w/Outer Body Side Panel Removed Deduct 3.0				
19 **Ext, Door Opng Frame**	R/L	15704804-3	3.0	38.75
20 **Reinf, Door Opng Frame**	99-00 R/L	15066626-7	1.5	59.49
	01-03 R/L	15078754-5	1.5	59.49
21 **Filler, Inr Rocker Panel**	R/L	15704798-7	2.0	3.66

SHEET METAL
EXTENDED CAB

Refinish Roof Panel Outside		3.3
Refinish Roof Panel Inside		1.4
Refinish Plenum Panel		
Front		.8
Lower		.8
Refinish Floor Panel		1.9
Refinish Outer Rear Body Panel Outside		2.4
Refinish Outer Rear Body Panel Inside		2.4
Refinish Outer Body Side Panel		
3 Door	R	1.4
	L	2.4
4 Door	R/L	1.4
Refinish Door Opening Frame		
3 Door	R	3.5
	L	3.0
4 Door	R/L	3.5
Refinish W/S Post & Upper Hinge Pillar (Section)	R/L	1.0
Refinish Hinge Pillar (Section)	R/L	1.0
Refinish Rocker Panel (Section)		
3 Door	R	2.4
	L	1.4
4 Door	R/L	2.4
Refinish Hinge Pillar Rear Section		
Ext Cab Right		1.0
4 Door	R/L	1.0
Refinish Door Opening Frame Extension (Left)		1.2
Section W/S Post & Upper Hinge Pillar	R/L	#5.5
#Includes R&R Upper Body Side Hinge		
Section Hinge Pillar	R/L	#7.5
#Includes R&R Upper & Lower Body Side Hinges		
Section Rocker Panel		
3 Door	R	#8.5
	L	#7.5
4 Door	R/L	#8.5
#w/Door & Necessary Trim Removed		
Section Hinge Pillar Rear		
3 Door Right		#6.5
4 Door	R/L	#6.5
#Does Not Include R&I/R&R Back Glass		
Add to R&R Body Side Otr Panel		
To R&I Back Glass		.4
To R&I Quarter Glass	L	.2

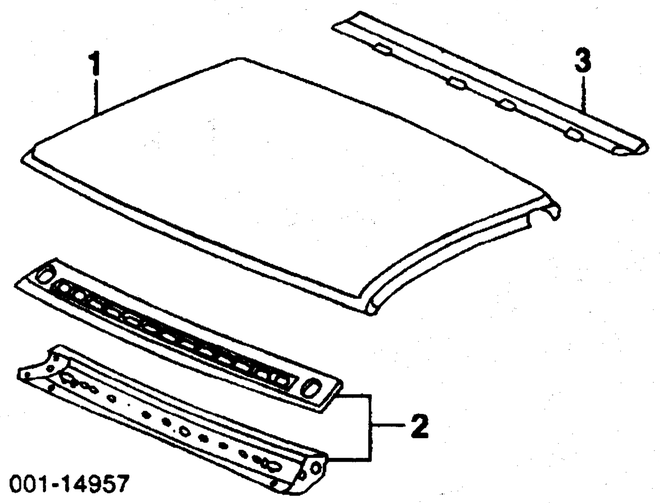

001-14957

1 **Panel, Roof**			
1999	15041329	15.0	201.15
2000			
3 Door	15041329	15.0	201.15
4 Door	15096838	15.0	171.86
2001-03	15096838	15.0	171.86
2 **Panel, Front Header**	15759034	#1.5	53.19
3 **Panel, Rear Header**	15044141	#1.5	33.76
#w/Roof Removed			
Bow, Roof Panel			
1999	15037596	1.5	51.86
2000			
3 Door	15037596	1.5	51.86
4 Door	15019404	1.5	52.17
2001-03	15019404	1.5	52.17

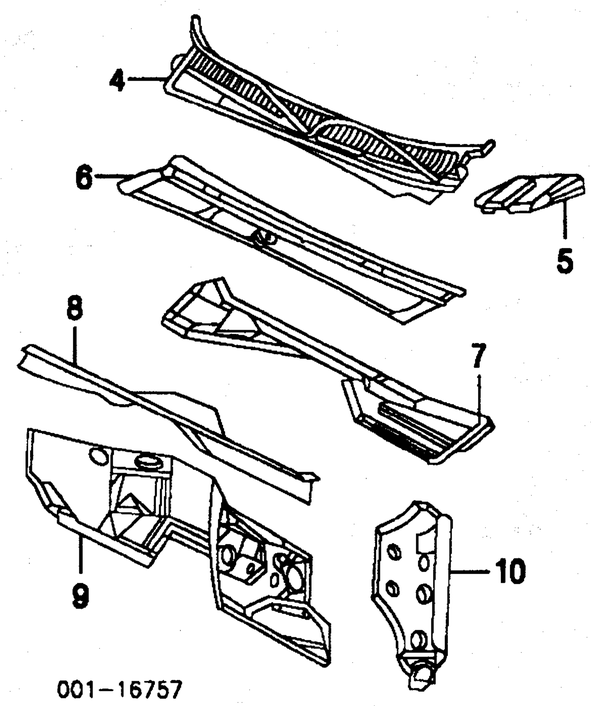

001-16757

4 **Panel, Ctr Cowl Grille**		15060065	.3	83.39
5 **Panel, Side Cowl Grille**	R	15753702	.2	8.95
	L	15045455	.1	8.95
6 **Panel, Upper Plenum**		15058693		125.29
7 **Panel, Front Plenum**		15703208	5.0	54.00
8 **Panel, Lower Plenum**		15703207	5.5	117.97
9 **Panel, Dash**		15703333	14.5	88.88
10 **Panel, Side Cowl**	R	15033564	2.5	70.27
	L	15752862	2.5	60.20
Antenna				
1999-02	R	15042595	.1	21.84
2003	L	15087886	.1	22.80
Base/Cable, Antenna	99-00 R	15052357	#2.1	12.84
	01 R	15074562	#2.1	15.90
	02-03 R	15074562	#2.1	15.90
#Includes R&R Upper Instrument Trim Panel				
Extension, Cable	99-02 R	15755162		10.66
	03 L	15094673		14.88
Bracket, Antenna	R	15042317	.3	5.19

Illustration Located in Next Column

11 **Panel, Inr Rocker**	R/L	15037822-1	5.5	28.37
12 **Filler, Inr Rocker Pnl**	L	15035030	1.5	16.78
13 **Panel, Floor**		15704774	#18.0	335.69
#w/Body Side Outer & Inner Panels & Outer & Inner Rocker Panels Removed				

Procedure Explanation Pages Must Be Used with the Above Text for an Accurate Damage Report.
Comments or suggestions? Need assistance? Call 1-800-854-7030 or 858-578-6550. Ext. 8220. Fax 1-888-256-7969 or 858-549-0629.

CAB Cont'd

SHEET METAL
EXTENDED CAB Cont'd

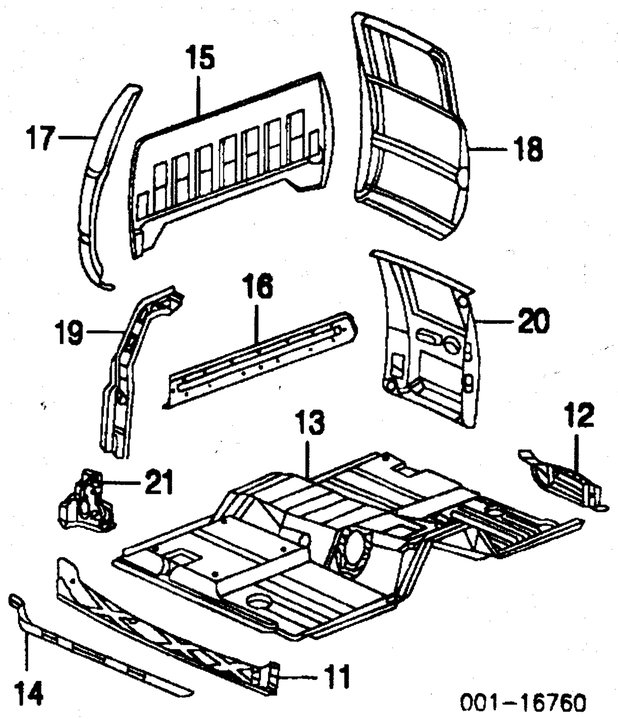

14	**Reinf, Floor Panel Ext**			
	1999-00			
	Right	15050502		36.10
	Left			
	3 Door	15051159		25.02
	4 Door	15019393		36.10
	2001-02 R	15050502		36.10
	L	15019393		36.10
15	**Panel, Rear Outer Body**	15704907	#9.5	123.05
	#w/Bed Removed, w/Right Outer & Inner Rocker & Rear Body Side Outer & Inner Panel Removed or w/Left Outer Rocker, Inner Rocker Filler Panel & Rear Body Side Outer & Inner Panel Removed, Includes R&I Seat			
16	**Panel, Rear Inner Body**	15766845		39.36
17	**Panel, Right Side Outer Body**			
	3 Door	15703330	#8.5	243.97
	4 Door	15703330	#8.5	243.97
18	**Panel, Left Side Outer Body**			
	3 Door	15049277	#14.5	243.97
	4 Door	15050248	#8.5	243.97
	#Includes R&R Back Glass, Left Side Also Includes R&R Quarter Glass			
19	**Panel, Right Side Inner Body**			
	3 Door	15703785	2.5	58.37
	4 Door	15703785	2.5	58.37
20	**Panel, Right Side Inner Body**			
	3 Door	15766252	3.5	66.20
	4 Door	15761658	3.5	58.37
21	**Bracket, Side Inner Body** R	15036859	1.0	11.08
	L	15019684	1.0	11.08

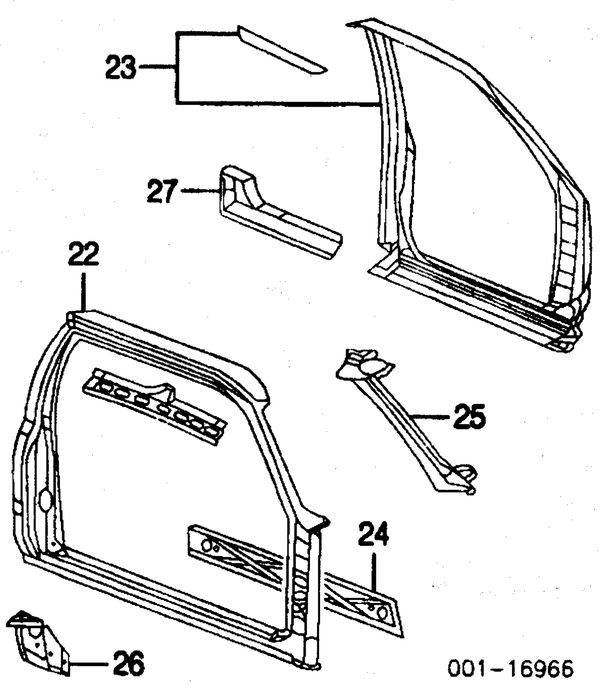

22	**Frame, Right Door Opng**			
	3 Door	12473026	#20.3	702.92
	4 Door	12473026	#21.6	702.92
23	**Frame, Left Door Opng**			
	3 Door	12473027	#15.0	587.90
	4 Door	12476247	#21.6	702.92
	#w/Outer Rear Body Side Panel Removed Deduct 3.0			
24	**Reinf, Inner Rocker Panel**			
	Front R	15709705	3.5	11.08
	L	15019395	3.5	11.08
25	**Reinf, Door Opng Frame** R/L	15066626-7	1.5	59.49
26	**Reinf, Inner Rocker Panel**			
	Rear R	15736362	2.0	8.64
	L	15050247	2.0	8.64

27	**Ext, Door Opng Frame**			
	3 Door	99-00 L 15037823	4.5	65.59

SHEET METAL
CREW CAB

Refinish Roof Panel Outside		3.6
Refinish Roof Panel Inside		2.2
Refinish Plenum Panel		
Front		.8
Lower		.8
Refinish Outer Rear Body Panel Outside		2.4
Refinish Outer Rear Body Panel Inside		2.4
Refinish Outer Side Body Panel	R/L	1.8
Refinish Door Opening Frame	R/L	5.5
Refinish W/S Post & Upper Hinge Pillar (Section)	R/L	1.0
Refinish Hinge Pillar (Section)	R/L	1.0
Refinish Rocker Panel (Section)	R/L	1.6
Refinish Center Pillar (Section)	R/L	1.0
Refinish Lock Pillar (Section)	R/L	1.0
Section W/S Post & Upper Hinge Pillar	R/L	#5.5
#Includes R&R Upper Body Side Hinge		
Section Hinge Pillar	R/L	#7.5
#Includes R&R Upper & Lower Body Side Hinges		
Section Rocker Panel	R/L	#8.0
#w/Doors & Necessary Trim Removed		
Section Center Pillar	R/L	6.5
Section Lock Pillar	R/L	#6.5
#Does Not Include R&I/R&R Back Glass		
Add to R&R Outer Side Body Panel To R&I Back Glass		.4

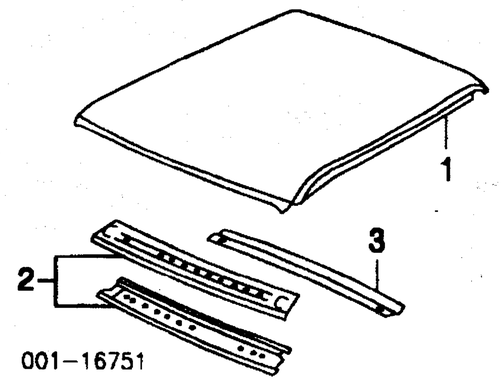

1	**Panel, Roof**	15070545	16.5	188.54
2	**Panel, Front Header**	15759034	#1.5	53.19
3	**Bow, Roof Panel**	15163052	#1.5	43.02
	#w/Roof Removed			

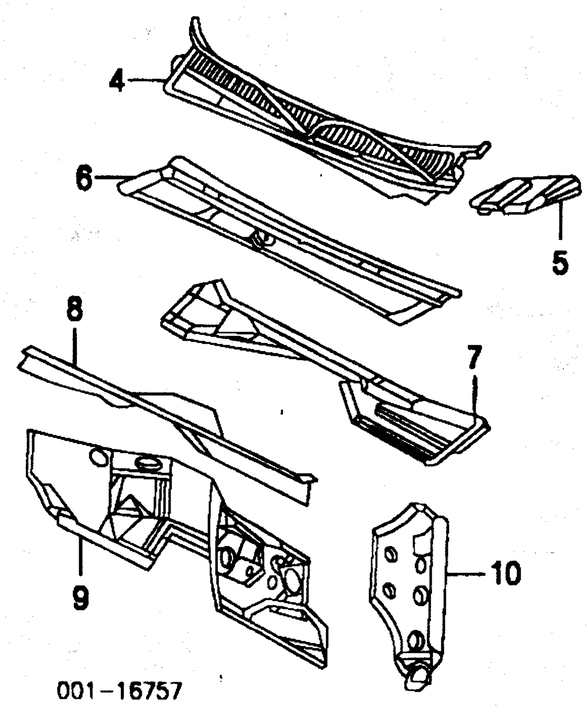

4	**Panel, Ctr Cowl Grille**	15060065	.3	83.39
5	**Panel, Side Cowl Grille** R	15753702	.2	8.95
	L	15045455	.1	8.95
6	**Panel, Upper Plenum**	15058693		125.29
7	**Panel, Front Plenum**	15703208	5.0	54.00
8	**Panel, Lower Plenum**	15703207	5.5	117.97
9	**Panel, Dash**	15703333	14.5	88.88
10	**Panel, Side Cowl** R	15033564	2.5	70.27
	L	15752862	2.5	60.20
	Antenna 01-02 R	15042595	.1	21.84
	03 L	15087886	.1	22.80
	Base/Cable, Antenna R	15074562	#2.1	15.90
	#Includes R&R Upper Instrument Trim Panel			
	Ext, Cable 01-02 R	15755162		10.66
	03 L	15094673		14.88
	Bracket, Antenna R	15042317	.3	5.19

Illustration Located in Next Column

11	**Panel, Front Floor**	15704774	#11.0	335.69
12	**Panel, Rear Floor**	15728464	#12.0	308.54
	#w/Body Side Outer & Inner Panels & Outer & Inner Rocker Panels Removed			

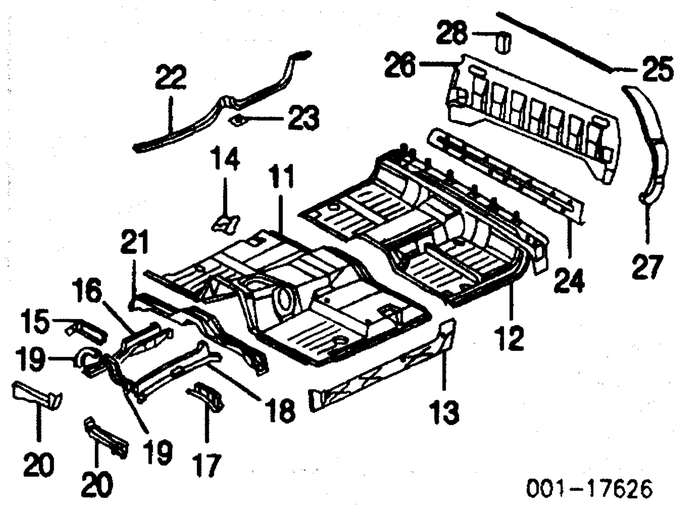

13	**Panel, Inr Rocker** R/L	15728478-7	6.0	18.81
14	**Bracket, Lwr**	15030586	.5	3.77
	Reinf, Floor Panel			
	Passenger Seat			
15	Outer	12475430	1.0	35.80
16	Inner	12475428	1.0	35.80
	Driver Seat			
17	Outer	12475429	1.0	38.95
18	Inner	12475427	1.0	35.80
19	**Stiffener, Floor Panel** 01 R/L	15003764-3	.8	3.66
	02-03 R/L	15173441-0	.8	3.66
20	**Sill, Front Cross** R/L	12475432-1	1.5	78.00
21	**Sill, Center Cross**	12475433	3.0	120.92
22	**Extension, Floor Panel**			
	Front R	15722524		78.51
	L	15766734		78.51
	Rear R/L	88937064-3		86.34
23	**Seal, Lwr Pillar** R/L	15761418-7		8.85
24	**Panel, Inner Rear Body**	15753579		38.64
25	**Panel, Inner Rear Roof**	15726244		21.56
26	**Panel, Outer Rear Body**	15704907	#9.5	123.05
	#w/Bed & One Body Side Outer Panel Removed, Includes R&I Seats & R&R Inner Rear Body Panel, w/Outer Side Panel Removed Deduct 4.7, Deduction Includes Common Surfaces & Included Operations			
27	**Panel, Outer Side Body** R/L	15075414-3	#8.5	58.17
	#Includes R&R Back Glass			
28	**Valve, Rear Outer Panel** R/L	15053675	.1	6.79

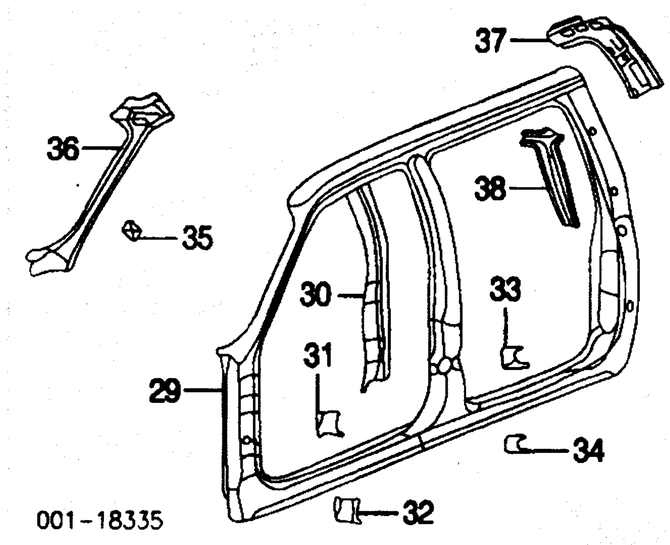

29	**Frame, Door Opening** R/L	88936958-7	#20.1	291.25
	#w/Outer Side Body Panel Removed Deduct 3.0			
30	**Panel, Lwr Pillar** 01-02 R	15715498	2.0	83.05
	L	15715497	2.0	11.69
	03 R/L	15170997-6	2.0	83.05
31	**Hinge, Upper Front Door-See Front Door Section**			
32	**Hinge, Lower Front Door-See Front Door Section**			
33	**Hinge, Upper Rear Door-See Rear Door Section**			
34	**Hinge, Lower Rear Door-See Rear Door Section**			
35	**Seal, Front Filler** R/L	15733808		3.63
36	**Reinf, Door Opng Frame** R/L	15078754-5	1.5	59.49
37	**Plate, Anchor** R/L	15154213		3.68
38	**Panel, Inner** R/L	15726242-1		123.05

EXTERIOR TRIM
STD CAB

Refinish Lwr Body Side Moulding R/L	.2	

Illustration Located in Next Column

1	**Moulding, Roof Joint (Adhesive)** R/L	15045552-1	.2	6.00
2	**Moulding, Lwr Body Side (Adhesive)**			
	Chevrolet			
	Black 99-02 R/L	15001882	.2	7.83
	03 R/L	15061050	.2	11.75
	Black/Chrome R/L	15045318-9	.2	9.56
	Copper R	15005174	.2	9.56
	L	15045313	.2	0.00
	Gold R	15045310	.2	9.56
	L	15045311	.2	9.36
	Gray R/L	15045316-7	.2	9.56
	Green R/L	15005172-1	.2	9.56

Labor Times Shown are for Replacement with New OEM Undamaged Parts on New Undamaged Vehicles.
Comments or suggestions? Need assistance? Call 1-800-854-7030 or 858-578-6550. Ext. 8220. Fax 1-888-256-7969 or 858-549-0629.

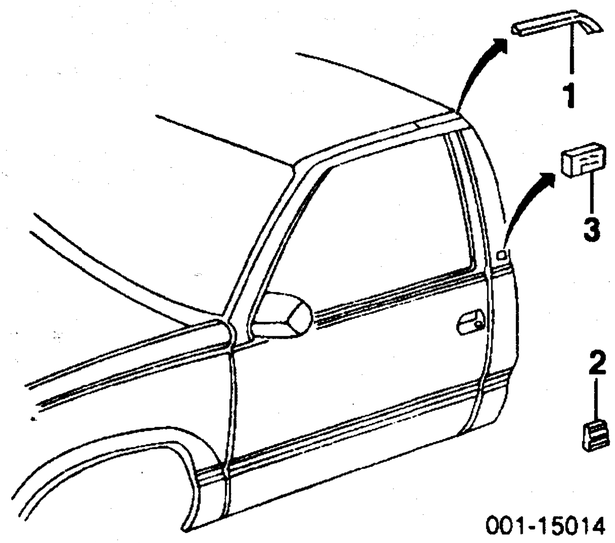

001-15014

Paint to Match	99-02 R	88937508	.2	0.00
	L	15045309	.2	9.56
	03 R/L	88979826-7	.2	11.75
GMC				
Black	99-02 R/L	15001882	.2	7.83
	03 R/L	15061050-1	.2	11.75
Chrome	99 R/L	15744375	.2	12.81
	00-02 R/L	15744375	.2	12.81
3 Nameplate (Adhesive)				
Chevrolet				
"LS"	R/L	15036135	.2	3.66
"LT"	R/L	15036136	.2	3.66
"SILVERADO"	R/L	15036132	.2	25.73
GMC				
"SL"	R/L	15036133	.2	10.37
"SLE"	R/L	15036134	.2	10.37
"SLT"	R/L	15036137	.2	7.32

EXTERIOR TRIM EXTENDED CAB

Refinish Lwr Side Body Moulding	R	.3
	L	.2

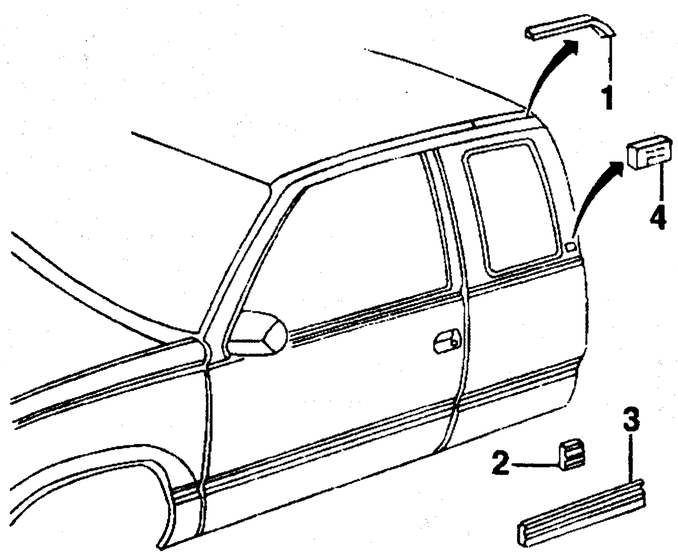

001-15015

1 Moulding, Roof Joint (Adhesive)				
Right		15045554	.2	6.00
Left				
3 Door		15045553	.2	13.32
4 Door		15044987	.2	6.00
Moulding, Lwr Body Side (Adhesive)				
2 Right				
Chevrolet¶		15045296	.2	19.32
GMC				
Sierra				
Black		15001881	.2	5.80
Chrome		15744374	.2	10.17
Sierra C3, Sierra Denali				
Paint to Match		88937190	.2	0.00
3 Left				
3 Door				
Chevrolet¶		15045295	.2	19.32
GMC				
Black		15001879	.2	18.51
Chrome		15744373	.2	23.80
4 Door				
Chevrolet¶		15037226	.2	8.14
GMC				
Sierra				
Black		15745219	.2	18.10
Chrome		15744374	.2	10.17
Sierra C3, Sierra Denali				
Paint to Match		88937190	.2	0.00
¶Black listed, Order by Application				
4 Nameplate (Adhesive)				
Chevrolet				
"LS"	R/L	15036135	.2	3.66
"LS QUADRASTEER"	R/L	15768782	.2	6.36
"LT"	R/L	15036136	.2	3.66
"LT QUADRASTEER"	R/L	15768781	.2	6.36
"SILVERADO"	R/L	15036132	.2	25.73
GMC				
"QUADRASTEER"	R/L	15094746	.2	6.36
"SL"	R/L	15036133	.2	10.37
"SLE"	R/L	15036134	.2	10.37
"SLE QUADRASTEER"	R/L	15768780	.2	6.36
"SLT"	R/L	15036137	.2	7.32
"SLT QUADRASTEER"	R/L	15768779	.2	6.36

EXTERIOR TRIM CREW CAB

Refinish Lwr Side Body Moulding	R/L	.2

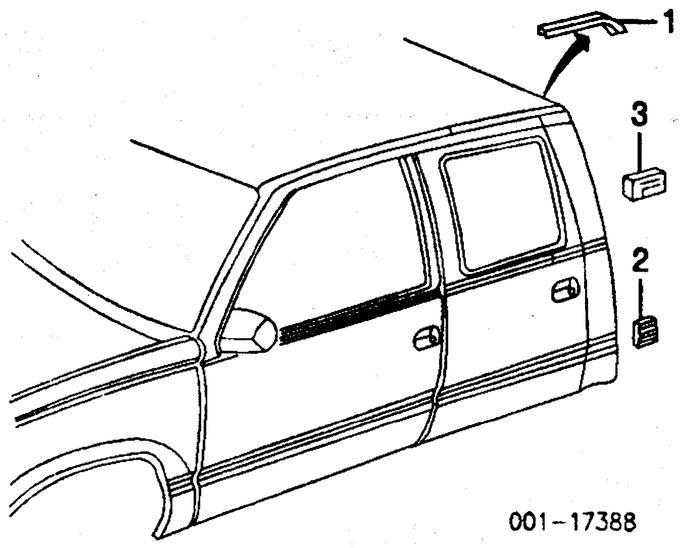

001-17388

1 **Moulding, Roof Joint (Adhesive)**	R/L	15071482-3	.2	6.00
2 **Moulding, Lwr Body Side (Adhesive)**				
Chevrolet				
Black/Chrome	R	15045296	.2	19.32
	L	15037226	.2	8.14
Gold	R	15045288	.2	19.32
	L	15037228	.2	8.14
Gray	R	15045294	.2	19.32
	L	88937516	.2	8.14
Green	R	N.A.	.2	0.00
	L	15744590	.2	8.14
Paint to Match	R/L	88937516-7	.2	8.14
GMC				
Black	R/L	15001881	.2	5.80
Chrome	R/L	15744374	.2	10.17
3 **Nameplate (Adhesive)**				
Chevrolet				
"LS"	R/L	15036135	.2	3.66
"LS QUADRASTEER"	R/L	15768782	.2	6.36
"LT"	R/L	15036136	.2	3.66
"LT QUADRASTEER"	R/L	15768781	.2	6.36
"SILVERADO"	R/L	15036132	.2	25.73
GMC				
"SL"	R/L	15036133	.2	10.37
"SLE"	R/L	15036134	.2	10.37
"SLT"	R/L	15036137	.2	7.32
"SLT QUADRASTEER"	R/L	15768779	.2	6.36

ROOF CLEARANCE LAMP

R&I Outer Roof Lamp Assembly	R/L	.2
R&I Center Roof Lamp Assy		.3

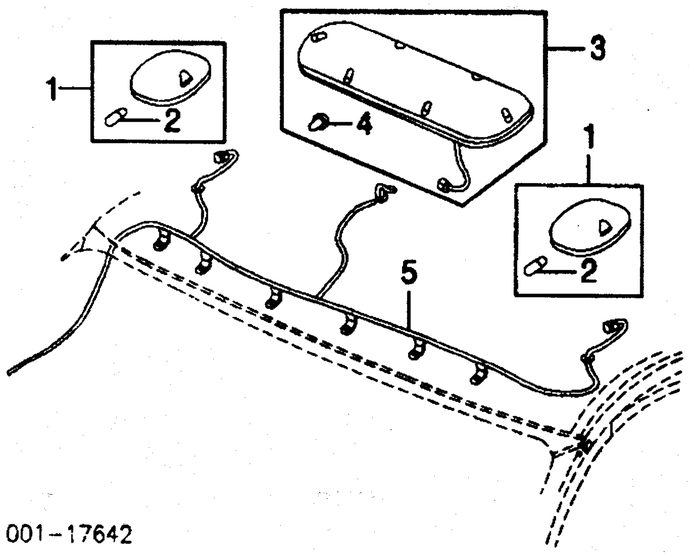

001-17642

1 **Lamp Assy, Outer Roof**	R/L	15059752	.2	62.10
2 **Bulb, Outer Lamp¶**	R/L	9421330	.2	■.62
¶Included w/Outer Roof Lamp Assy				
3 **Lamp Assy, Center Roof**		15059751	.3	62.10
4 **Bulb, Center Lamp¶ (3)**		25089350		■10.18
¶Included w/Center Roof Lamp Assy				
5 **Harness, Roof Lamp**				
w/On-Star System		15075447		80.39
w/o On-Star System		15366160		33.40

INTERIOR TRIM STD CAB, EXTENDED CAB

R&I Headliner	1.8
Add to R&I/R&R Headliner w/Console	#.5
#Includes R&I/R&R Console	
R&I Console	.5

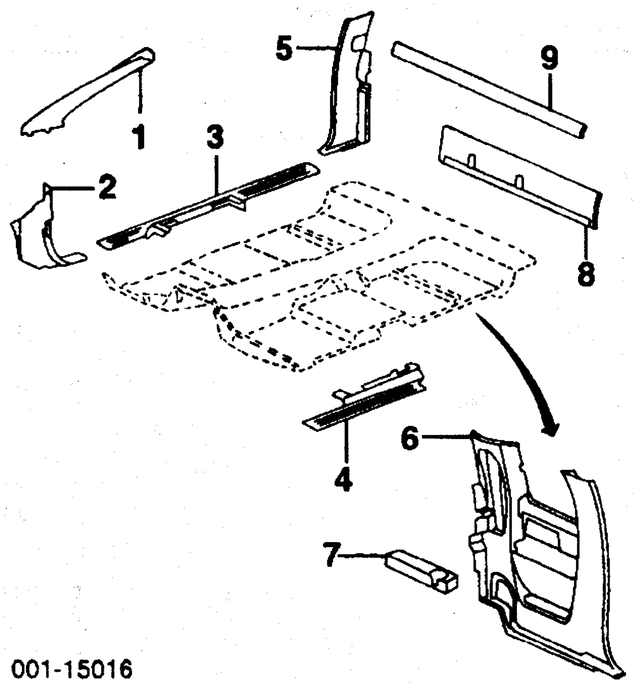

001-15016

1 Moulding, Inside Garnish-See Windshield Section				
2 Panel, Pillar Trim				
Graphite	99-02 R/L	15066686-5	.3	14.75
	03 R	N.A.	.3	0.00
	L	15165772	.3	15.26
Neutral	99-02 R/L	15066690-89	.3	14.75
	03 R	15066690	.3	14.75
	L	15165774	.3	15.26
Pewter	99-02 R/L	15066692-1	.3	14.75
	03 R	15165776	.3	15.26
	L	15165775	.3	14.75
Shale	99-02 R/L	15066688-7	.3	14.75
	03 R	15066688	.3	14.75
	L	15165773	.3	15.26
Plate, Sill Panel¶				
3 Right				
Std Cab	99-02	15046495	.3	9.56
	03	15051424	.3	11.39
Extended Cab	99-02	15068360	.3	18.68
	03	15086983	.3	18.68
4 Left				
Std Cab	99-02	15046500	.3	7.32
	03	15051425	.3	11.39
Extended Cab	99-02	15068361	.3	18.68
	03	15051422	.3	18.00
5 Panel, Rear Trim¶				
Std Cab	R/L	15051522-1	.3	45.35
Extended Cab	R	15073138	.3	62.82
6 Panel, Lower Trim¶				
Extended Cab				
3 Door				
w/RPO-YE9	L	15757274	.4	139.86
w/o RPO-YE9	L	15748457	.4	139.86
4 Door	L	15073139	.3	60.53
7 Armrest, Lower Trim Pnl¶		15728653		58.18
Moulding, Rear Lwr Window¶				
8 Std Cab		15772037	.2	28.42
9 Extended Cab		15029523	.2	14.11
¶Order by Application				

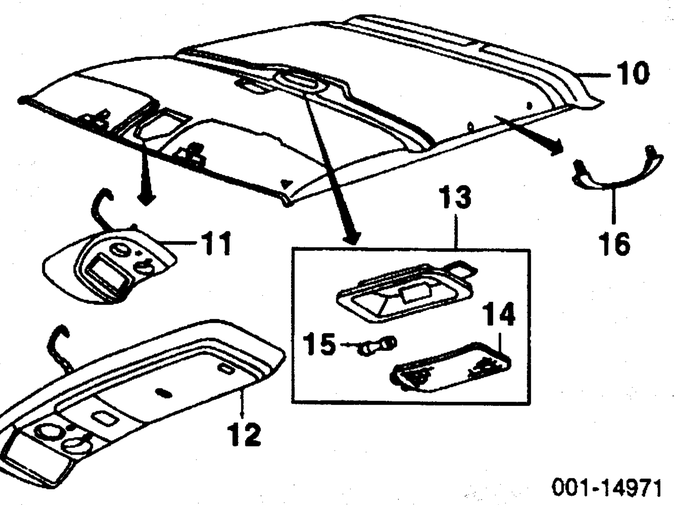

001-14971

10 Panel, Headliner¶			
1999-00			
Std Cab	15071372	1.8	373.68
Extended Cab	15042656	1.8	360.00
2001			
Chevrolet	15071378	1.8	373.68
GMC			
Sierra	15071378	1.8	373.68
Sierra C3	15073326	1.8	646.84
2002			
w/Coat Hooks			
Chevrolet	15071378	1.8	373.68
GMC			
Sierra	15071378	1.8	373.68
Sierra Denali	15073326	1.8	646.84
w/o Coat Hooks			
Chevrolet	15095213	1.8	389.28
GMC			
Sierra	15095213	1.8	389.28
Sierra Denali	15095216	1.8	0.00
2003			
Chevrolet	15185991	1.8	389.28
GMC			

CAB Cont'd

INTERIOR TRIM

STD CAB, EXTENDED CAB Cont'd

Sierra		15185993	1.8	0.00
Sierra Denali		15184892	1.8	0.00
Console, Roof¶				
11 RPO-DK7				
1999-00		15746962	.5	62.00
2001-02				
Chevrolet		15769398	.5	347.46
GMC				
Sierra		15769398	.5	347.46
Sierra C3, Sierra Denali		15769380	.5	394.44
2003				
Chevrolet				
w/GPS		15090141	.5	337.89
w/o GPS		15090139	.5	82.77
GMC				
Sierra				
w/GPS		15090141	.5	337.89
w/o GPS		15090139	.5	82.77
Sierra Denali		15090155	.5	449.07
12 RPO-DK6		15769400	.5	337.89
13 **Lamp Assy, Dome¶**	99-02	15037598	.3	36.00
	03	15166043	.3	36.00
¶Order by Application				
14 **Lens, Dome Lamp (a)**		12472837	.1	5.10
15 **Bulb (a)**		9431808	.1	■1.62
(a) Included w/Dome Lamp Assy				
16 **Handle, Assist¶**				
Std Cab	R	15048750	.2	18.89
Extended Cab				
Front	R	15048750	.2	18.89
Rear	R	15048758	.2	18.89
	L	15048754	.2	18.89
¶Graphite listed, Order by Application				

INTERIOR TRIM CREW CAB

R&I Headliner	3.0
Add to R&I/R&R Headliner w/Console	#.5
#Includes R&I/R&R Console	
R&I Console	.5

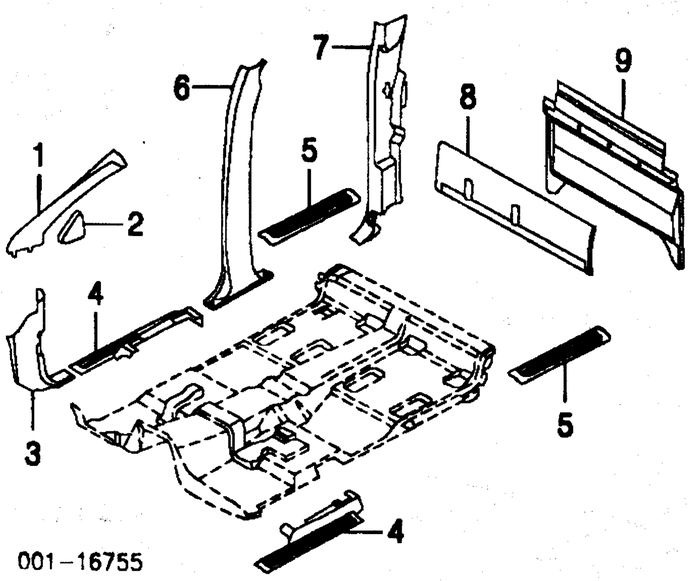

1	**Moulding, Inside Garnish-See Windshield Section**				
2	**Panel, Upper Trim¶**	R/L	15770653-2	.1	4.07
3	**Panel, Pillar Trim¶**	01-02 R/L	15066686-5	.3	14.75
		03 R	15066692	.3	14.75
		L	15165776	.3	15.26
4	**Plate, Front Sill¶**	01-02 R	15046495	.3	9.56
		L	15046500	.3	7.32
		03 R/L	15051424-5	.3	11.39
5	**Plate, Rear Sill¶**	R/L	15750388	.3	3.77
6	**Panel, Center Pillar Trim¶**	01-02 R/L	15768585-4	.3	67.96
		03 R	15768589	.3	67.96
		L	15162204	.3	67.96
7	**Panel, Rear Pillar Trim¶**	R/L	15069628-7	.3	36.42
8	**Moulding, Lower Rear Window¶**		15772039	.2	32.89
9	**Panel, Lower Rear Window¶**		15051523	.4	70.14
	¶Order by Application				

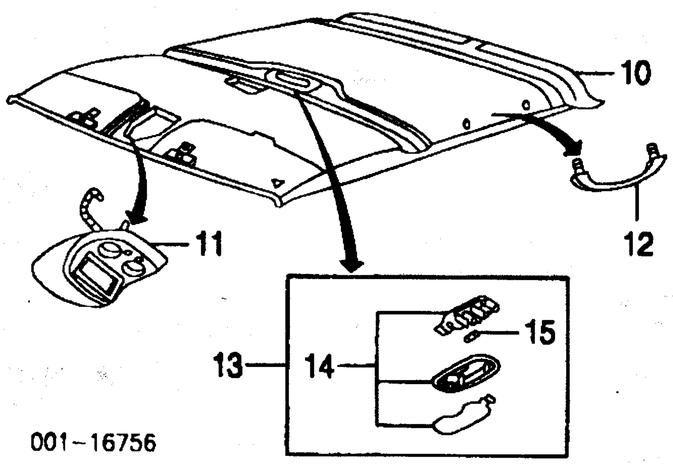

10 **Panel, Headliner¶**

2001-02				
w/On-Star System		15071361	3.0	373.68
w/o On-Star System		15071358	3.0	373.68
2003				
w/Entertainment System		15185985	3.0	0.00
w/o Entertainment System		15185986	3.0	0.00
11 **Console, Roof¶**				
w/On-Star System		15769398	.5	347.46
w/o On-Star System		15056825	.5	62.00
12 **Handle, Assist¶**				
Front	R	15052554	.2	18.89
Rear	R/L	15761205-4	.2	24.60
¶Order by Application				
13 **Lamp Assy, Dome¶**	01-02	15765711	.3	36.00
	03	15166054	.3	36.00
¶Order by Application				
14 **Housing, Lwr Dome Lamp (a)**		15032587	.3	19.00
15 **Bulb, Lamp (a)**		12450074	.2	■1.70
(a) Included w/Dome Lamp Assy				

FRONT SEAT

R&I Seat Assy ..... R/L .3

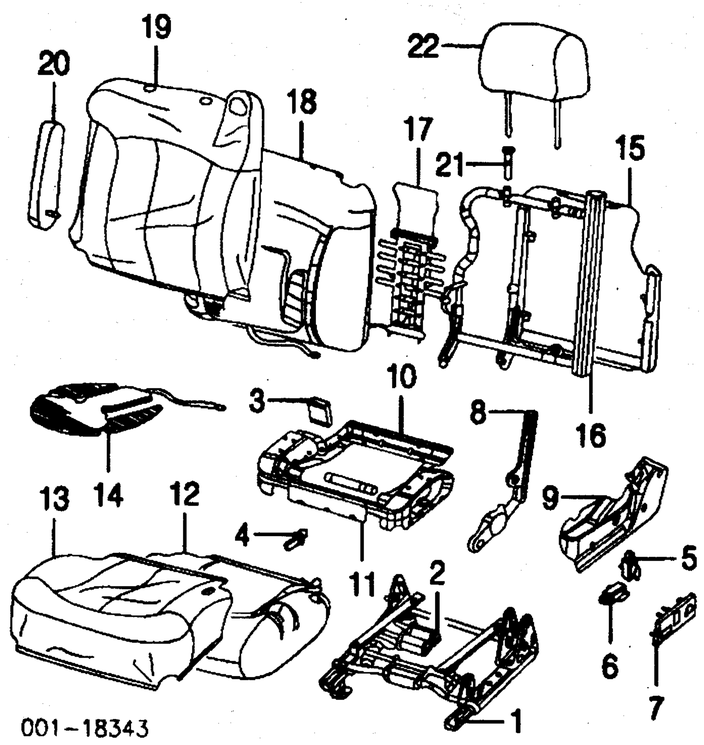

1 **Adjuster, Front Seat¶**				
Manual				
Passenger Side		12473278	.5	335.58
Driver Side				
Std Cab		12473444	.5	335.58
Extended Cab		12473277	.5	365.77
Power				
Passenger Side	99-00	12473575	.5	780.28
	01-02	88935561	.5	676.42
	03	88940334	.5	0.00
Driver Side	99-00	12473554	.5	780.28
	01-02	12476877	.5	676.42
	03	88940273	.5	508.77
2 **Motor, Adjuster¶**				
Passenger Side	99-02	12474125	.5	197.20
	03	88940269	.5	0.00
Driver Side	99-02	12474125	.5	197.20
	03	88940269	.5	0.00
3 **Module, Adjuster¶**	L	88939238	.7	140.35
Bracket, Module¶	L	12473997		90.63
4 **Module, Recliner¶**	L	12473999	.7	26.10
5 **Switch, Adjuster¶**				
Passenger Side		12450256	.4	44.82
Driver Side		12450256	.4	44.82
6 **Switch, Lumbar¶**				
Passenger Side		12473558	.4	37.84
Driver Side		12473558	.4	37.84
7 **Bezel, Adjuster Switch¶**				
Passenger Side		12473403		5.81
Driver Side		12473401		5.81
8 **Recliner, Seat¶**				
Passenger Side		88936523		118.82
Driver Side		88936517		118.82
9 **Cover, Adjuster¶**				
Passenger Side		12473585	.1	18.84
Driver Side		12473370	.1	18.84
10 **Frame, Seat Bottom¶**				
Passenger Side		12478890	#.3	112.74
Driver Side		12476891	#.3	150.32
#w/Seat Assy Removed				
11 **Actuator, Lumbar¶**				
Passenger Side		12473280		6.79
Driver Side		12473279		6.79
12 **Cushion, Seat Bottom¶**				
Passenger Side		12473282	#.5	84.63
Driver Side		12473281	#.5	84.63
13 **Cover, Seat Bottom¶**				
Passenger Side		12477281	#.5	354.74
Driver Side		12477276	#.5	354.74
14 **Heater, Seat¶**				
Passenger Side		88935460	#.5	61.61
Driver Side		88935457	#.5	62.72
#w/Seat Assy Removed, R&R One Side Complete				
15 **Panel, Seat Back¶**				
Passenger Side		12473306		39.12
Driver Side		N.A.		0.00
16 **Frame, Seat Back¶**				
Passenger Side		88935586	#.8	112.74
Driver Side		88935556	#.8	112.74
17 **Lumbar, Seat Back¶**				
Passenger Side		88944135	#.8	0.00
Driver Side		88944135	#.8	0.00
18 **Cushion, Seat Back¶**				
Passenger Side		12473573	#.8	84.63
Driver Side		12473561	#.8	84.63
19 **Cover, Seat Back¶**				
Passenger Side		88943905	#.8	361.89
Driver Side		88943902	#.8	361.89
#w/Seat Assy Removed, R&R One Side Complete				
20 **Armrest, Seat¶**				
Passenger Side		88938397	.4	250.09
Driver Side		88938394	.4	250.09
21 **Support, Headrest¶**				
Passenger Side	R/L	12473301		3.58
Driver Side	R/L	12473301		3.58
22 **Headrest¶**				
Passenger Side		88936525	.1	214.74
Driver Side		88936525	.1	214.74
¶Order by Application				

REAR SEAT

R&I Rear Seat 3

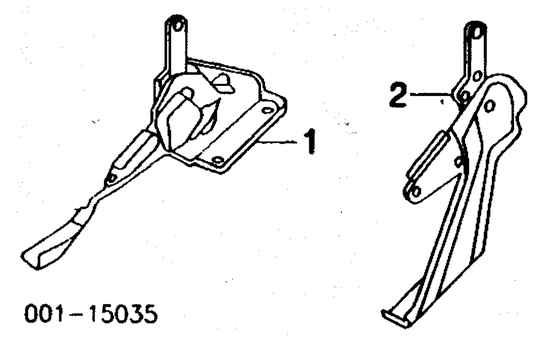

Latch w/Brkt, Rear Seat				
1 Right				
Extended Cab	99-00	12474153	.4	112.74
	01-03	12478940	.4	107.37
Crew Cab		88934753	.4	0.00
2 Left				
Extended Cab	99-00	12477647	.4	0.00
	01-03	12477647	.4	0.00
Crew Cab		88934754	.4	0.00

SEAT BELTS

FRONT

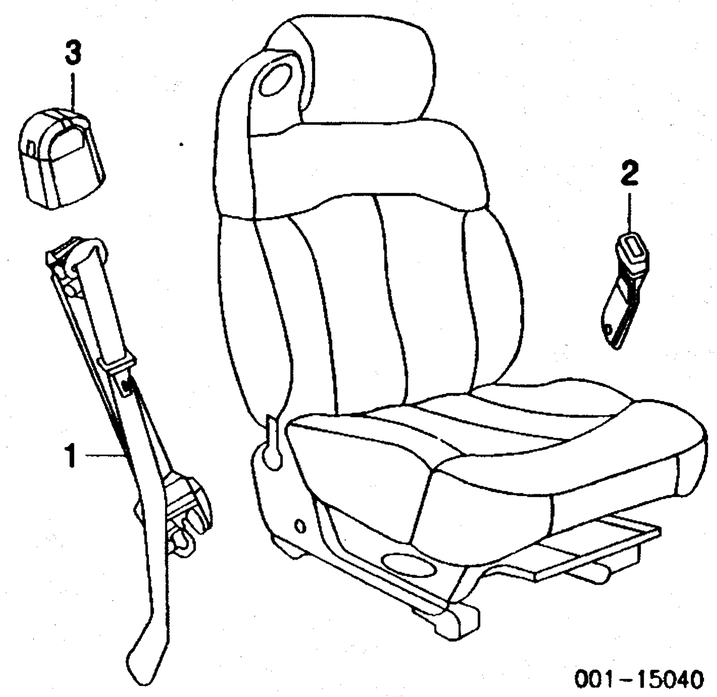

1 **Retractor, Front Seat¶**	99-02 R	88935297	#1.1	74.00
	L	88935285	#1.1	72.50
	03 R	88955240	#1.1	74.00
	L	88955210	#1.1	74.00
#w/Seat Assy Removed				
2 **Buckle, Front Seat¶**	99-02 R/L	12472694-3	.2	63.00
	03 R/L	88955219	.2	64.30
¶Order by Application				
3 **Cover, Shoulder Guide**	R/L	12473304-3		6.63

FRONT CENTER

Illustration Located in Next Column

1 **Retractor, Center Seat¶**	99-02	12472727	.5	55.90
	03	88940121	.5	55.90
2 **Buckle, Center Seat¶**		12472728	.3	54.75
¶Graphite listed, Order by Application				

Labor Times Shown are for Replacement with New OEM Undamaged Parts on New Undamaged Vehicles.
Comments or suggestions? Need assistance? Call 1-800-854-7030 or 858-578-6550. Ext. 8220. Fax 1-888-256-7969 or 858-549-0629.

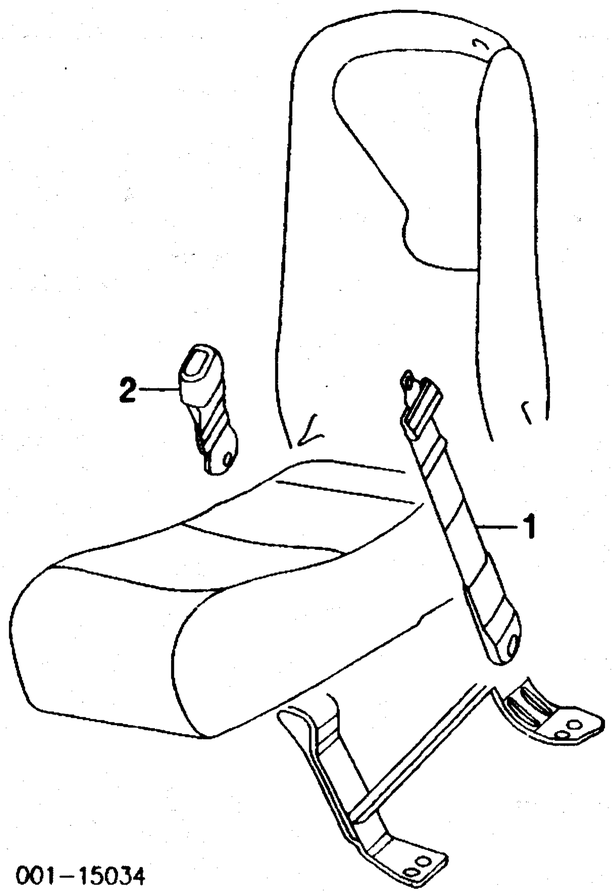

001-15034

REAR

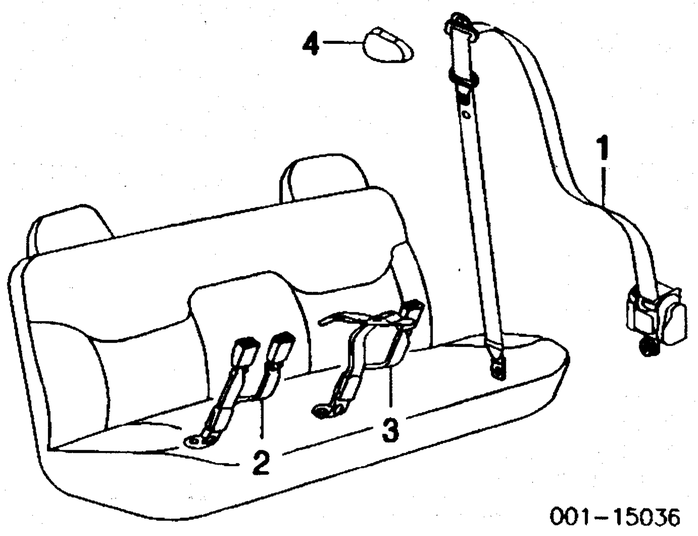

001-15036

1 **Retractor, Rear Seat¶**				
Extended Cab	99-02 R/L	88940247	1.0	64.30
	03 R	88940245	1.0	64.30
	L	88955259	1.0	64.30
Crew Cab	R	88940245	1.0	64.30
	L	88955259	1.0	64.30
2 **Buckle, Rear Seat¶**				
Extended Cab	99-02	12472765	#.5	55.90
	03	88940235	#.5	55.90
Crew Cab		88955226	#.5	55.90
3 **Latch, Rear Seat¶**				
Extended Cab	99-02	12472766	#.5	55.90
	03	88934674	#.5	55.90
#Includes R&I Rear Seat Assy				
4 **Cover, Shoulder Guide¶**	R	15765363		6.84
	L	15765370		6.95

¶Order by Application

FRONT DOOR

Use Procedure Explanations 16 and 28 with the following text.

SHEET METAL

Refinish Door Outside		
Std Cab	R/L	2.6
Extended Cab	R/L	2.6
Crew Cab	R/L	2.6
Add for Jambs & Interior	R/L	1.0
Add for Jambs	R/L	.5
R&I Door Assy	R/L	.5
Add to R&I Door Assy		
w/Pwr Windows	R/L	.2
w/Pwr Locks	R/L	.2
Section Door Repair Panel	R/L	#6.0
#Cut at Belt Line, Includes R&I/R&R Door Glass		
Add to R&R Door Shell or Door Repair Panel		
w/Manual or Power Remote Mirror	R/L	.2
w/Below Eye or Camper Mirror	R/L	.2
w/West Coast Mirror	R/L	.3
w/Wiring Harness	R/L	.5

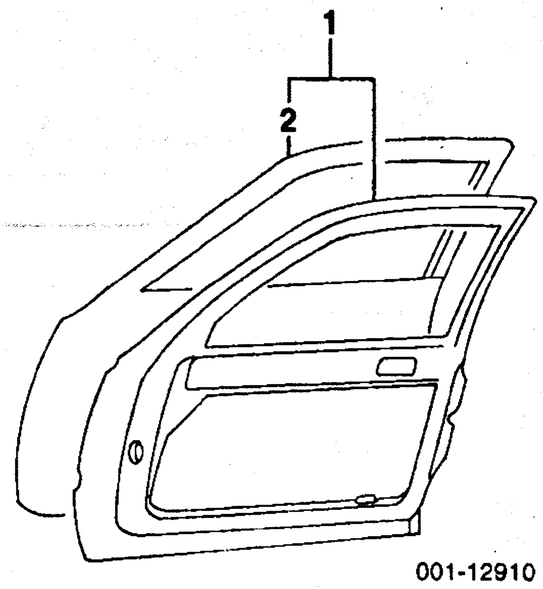

001-12910

1 **Shell Assy, Door¶**				
Std Cab	R/L	15017224-3	#4.7	429.46
Extended Cab	R/L	15017224-3	#4.7	429.46
Crew Cab	R/L	15017224-3	#4.7	429.46
¶When Replacing Door Shell, Door Side Hinges Must Also Be Replaced				
#Includes Replacing Upper & Lower Door Side Hinges				
2 **Panel, Door Repair¶**				
Std Cab	R/L	15037398-7	#7.2	182.20
Extended Cab	R/L	15037398-7	#7.2	182.20
Crew Cab	R/L	15037398-7	#7.2	182.20
¶Included w/Door Shell Assy				
#Includes R&I/R&R Door Glass				

EXTERIOR TRIM

Refinish Side Moulding	R/L	.4
R&I Outer Belt Moulding	R/L	#.6
#Includes R&I Trim Panel		

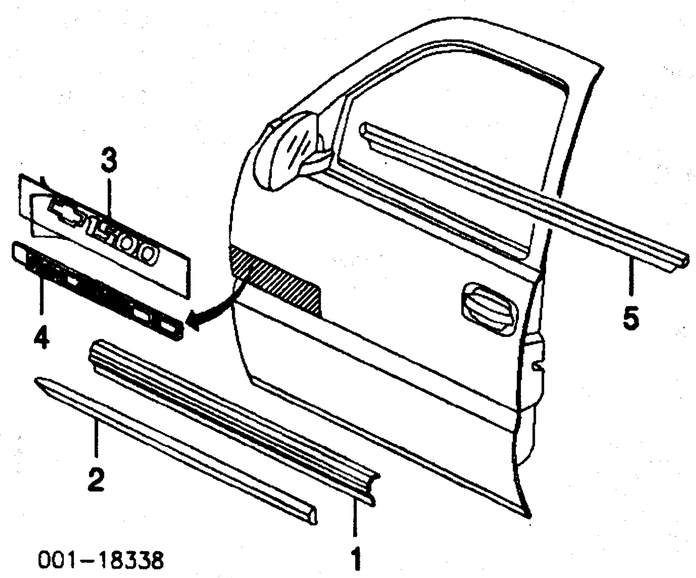

001-18338

Moulding, Side (Adhesive)¶				
1 Chevrolet				
Black	R/L	15001878	.2	30.41
Black/Chrome	99-02 R/L	15045280-1	.2	30.41
	03 R/L	15060990-89	.2	39.86
Copper	R/L	88937505-6	.2	30.41
Gold	R/L	15045272-3	.2	30.41
Graphite	R	15175444	.2	0.00
	L	15083610	.2	0.00
Gray	R	88937506	.2	30.41
	L	15045279	.2	30.41
Green	00 R	15045276	.2	30.41
	L	88937505	.2	30.41
	01-02 R	88937506	.2	30.41
	L	N.A.	.2	0.00
Paint to Match	99-02 R/L	88937506-5	.2	30.41
	03 R	88979824	.2	55.02
	L	N.A.	.2	0.00
2 GMC				
Sierra				
Black	R/L	15001878	.2	30.41
Chrome	R/L	15744371	.2	39.86
Sierra C3, Sierra Denali				
Black	R/L	15755367	.2	55.02
Green	R/L	15755369	.2	55.02
Pewter	R/L	15755365	.2	55.02
¶Order by Application				
3 **Decal, "1500"**	R/L	15733703	.2	6.41
4 **Nameplate (Adhesive)**				
"1500"	R/L	15707431	.2	13.02
"1500 HD"	R/L	15760769	.2	18.31
"2500"	R/L	15707434	.2	13.02
"2500 HD"	R/L	15767140	.2	19.22
"3500"	R/L	15707436	.2	12.61
"DENALI"	R/L	15070426	.2	25.63
"DURAMAX DIESEL"	R/L	15767139	.2	9.76
"GMC 2500"	R/L	15707435	.2	14.24
"GMC 2500 HD"	R/L	15767141	.2	20.64
"GMC 3500"	R/L	15707437	.2	13.83
5 **Moulding, Outer Belt**	R/L	15758042-3	#.2	19.53
#w/Trim Panel Removed				

OUTSIDE MIRROR

R&I Rear View Mirror		
w/Manual or Power Remote Mirror	R/L	.2
w/Below Eye or Camper Mirror	R/L	.2
w/West Coast Mirror	R/L	.3

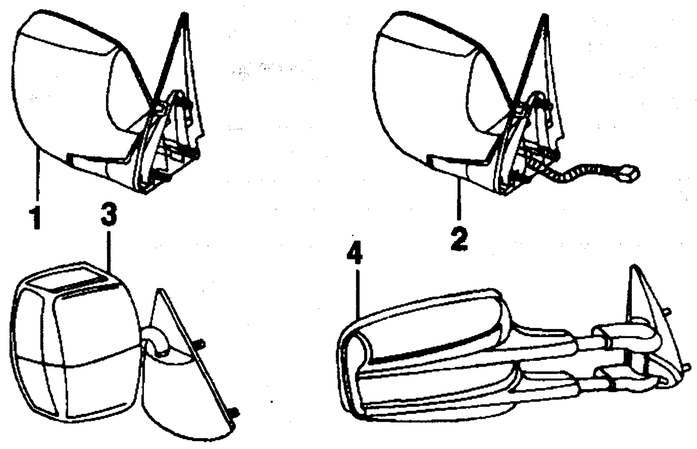

001-15020

Mirror Assy, Rear View¶				
Standard				
1 Man Remote (RPO-DE2)	R/L	15037958-7	.2	92.54
2 Pwr Remote				
1999-00				
Heated (RPO-DL8)	R	15062886	.2	173.59
	L	15062885	.2	201.66
Non-Heated (RPO-D48)	R	15062881	.2	173.59
	L	15062880	.2	201.66
2001-02				
Chevrolet				
Heated (RPO-DL8)	R	15062886	.2	173.59
	L	15062885	.2	201.66
Heated (RPO-DR2)	R/L	88944240-1	.2	0.00
Non-Heated (RPO-D48)	R	15062881	.2	173.59
	L	15062882	.2	201.66
GMC				
Sierra	R/L	88944240-1	.2	0.00
Sierra C3, Sierra Denali	R/L	88986366-7	.2	0.00
2003				
Chevrolet	R/L	15180387-6	.2	516.95
GMC				
Sierra	R/L	15180387-6	.2	516.95
Sierra Denali	R/L	88944358-9	.2	0.00
3 Below Eyeline (RPO-D44)	99-00 R	15048183	.2	d110.00
	L	15048182	.2	116.44
	01-03 R	15721338	.2	116.44
	L	15048182	.2	116.44
¶Order by Application				
Glass, Mirror¶ (a)				
Standard				
1999-02				
Heated				
RPO-DL8	R/L	12477846-5	.2	39.05
RPO-DR2	R	88986363	.2	39.05
	L	88986364	.2	228.81
Non-Heated (RPO-D48)	R/L	12477844-3	.2	39.05
2003				
Chevrolet	R	88944394	.2	0.00
	L	N.A.	.2	0.00
GMC				
Sierra	R	88944394	.2	0.00
	L	N.A.	.2	0.00
Sierra Denali	R	88944392	.2	130.85
	L	88944391	.2	0.00
Below Eyeline (RPO-D44)	R/L	12477850-49	.2	39.05
¶Included w/Rear View Mirror Assy				
(a) Order by Application				
4 **Mirror, Rear View**				
Camper (RPO-DF2)	99-02 R	15745510	.2	172.88
	L	15745509	.2	173.59
	03 R	15163033	.2	173.59
	L	15745509	.2	173.59

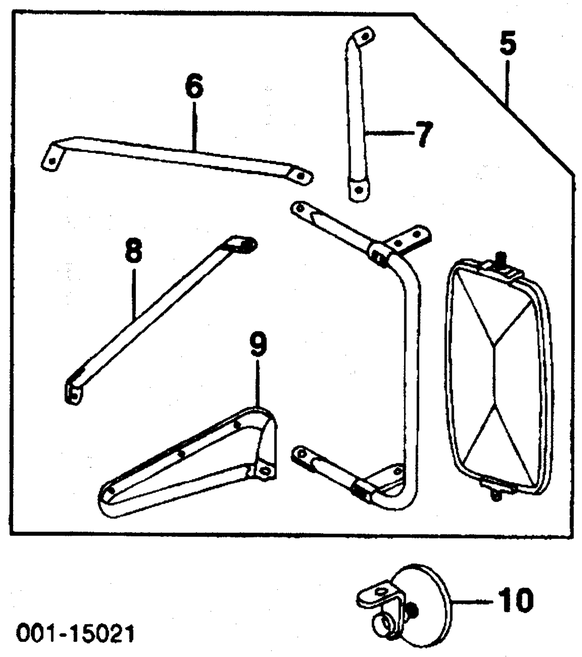

001-15021

5 **Mirror Assy, Rear View**				
West Coast Brand (RPO DG5, 9F8, 9N8)	R/L	12474088-7	.3	116.44

FRONT DOOR Cont'd

OUTSIDE MIRROR Cont'd

6	Brace, Upper Front¶	R/L	12474094-5	#.4	12.81
7	Brace, Upper Rear¶	R/L	12474096-7	#.4	11.59
8	Brace, Lower Diagonal¶	R/L	12474098-9	#.4	11.29
9	Bracket, Lower¶	R/L	12474092-3	#.4	18.41

¶Included w/Rear View Mirror Assy
#R&R One Side Complete, Includes R&R Aux Mirror

10	Mirror, Aux	R/L	88944071	.2	38.24

INTERIOR TRIM

R&I Trim Panel	R/L	.4

NOTE: All Parts in this section are included in R&R Trim Panel unless noted otherwise.

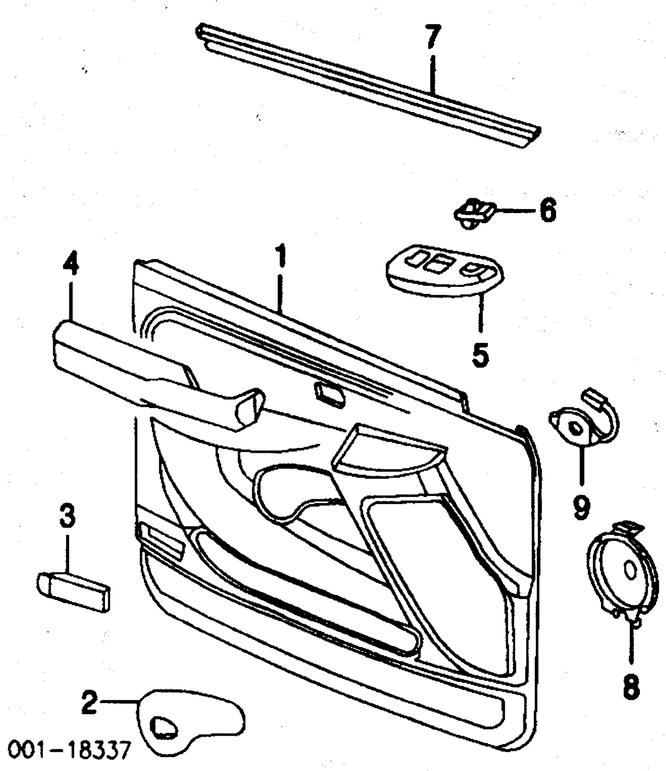

1	Panel, Door Trim¶				
	1999-00				
	Chevrolet	R/L	15772353-2	.6	389.28
	GMC	R/L	15772363-2	.6	389.28
	2001-02				
	Chevrolet	R/L	15772403-2	.6	389.28
	GMC				
	Sierra	R/L	15772403-2	.6	389.28
	Sierra C3, Sierra Denali	R	15753210	.6	389.28
		L	15076326	.6	389.28
	2003				
	Chevrolet				
	4 Speaker System	R/L	15757843-2	.6	389.28
	6 Speaker System	R	15182769	.6	389.28
		L	15182801	.6	389.28
	GMC				
	Sierra				
	4 Speaker System	R/L	15757843-2	.6	389.28
	6 Speaker System	R	15182769	.6	389.28
		L	15182801	.6	389.28
	Sierra Denali	R	15182791	.6	466.47
		L	15182833	.6	0.00
2	Bezel, Inside Handle¶				
	w/RPO-YE9	R	15052534	.2	4.04
		L	15051575	.2	3.47
	w/o RPO-YE9	R	15043559	.2	4.04
		L	15043560	.2	3.32
	¶Order by Application				
3	Lamp, Courtesy				
	w/RPO-YE9	R/L	15021518-7	.2	14.10
	Reflector, Warning				
	w/o RPO-YE9	R/L	15961884	.2	3.05
4	Armrest¶				
	w/RPO-YE9	R	15052613	.2	62.79
		L	15052612	.2	60.79
	w/o RPO-YE9	R/L	15757909-10	.2	62.79
5	Plate, Switch Mount¶				
	1999-00	R	15754159	#.3	23.49
		L	15754153	#.3	23.49
	2001-02				
	Std Cab, Extended Cab	R	15051588	#.3	23.49
		L	15051607	#.3	23.49
	Crew Cab	R	15051588	#.3	23.49
		L	15053027	#.3	23.49
	2003	R/L	N.A.	#.3	0.00
	¶Order by Application				
6	Switch, Door Lock/Window				
	Std Cab, Extended Cab	99 R	15047638	#.3	30.84
		L	15047637	#.3	70.26
		00-02 R	15753935	#.3	44.00
		L	15753934	#.3	71.99
		03 R/L	15077858	#.3	13.00
	Crew Cab	01-02 R	15753935	#.3	44.00
		L	15062650	#.3	71.99
		03 R/L	15077858	#.3	13.00
	#R&R One Side Complete				
7	Moulding, Inner Belt¶-See Glass & Parts Section				
	¶Serviced w/Glass Run				
8	Speaker				
	4 Speaker System (RPO-UQ5)	R/L	15038567	#.2	24.00
	Enhanced System				
	w/Bose Speaker System	R/L	15054679	#.2	57.60
	w/o Bose Speaker System	R/L	15038566	#.2	31.20
9	Speaker, Tweeter	R/L	15071121	#.2	31.20
	Shield, Moisture	99-01 R/L	15772961-2	#	19.53
		02-03 R/L	15162666-7	#	19.53
	#w/Trim Panel Removed, Not Included in R&R Trim Panel				

HARDWARE

Refinish Upper Front Door Hinge		
Door Side	R/L	.2
Body Side	R/L	.2
Refinish Lower Front Door Hinge		
Door Side	R/L	.2
Body Side	R/L	.2
R&I Outside Handle	R/L	#.7
#Includes R&I Trim Panel		

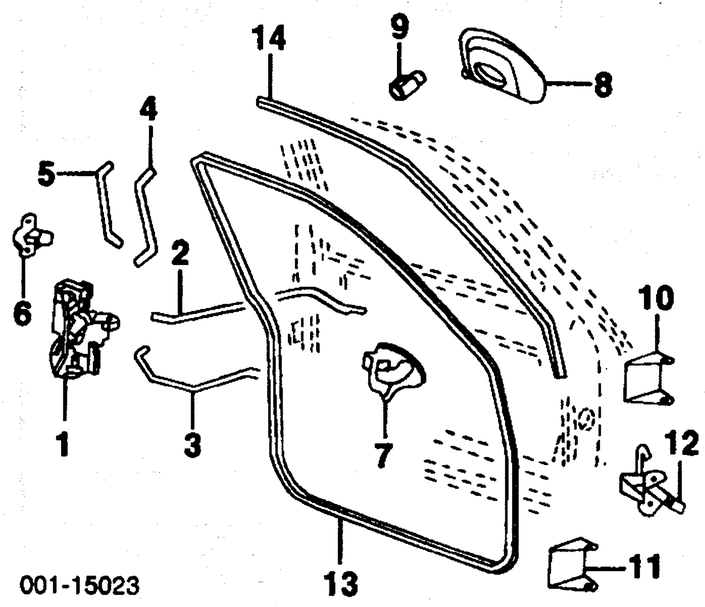

1	Latch, Door				
	Manual	R	16637316	#.3	68.76
		L	15758163	#.3	0.00
	Power				
	w/Keyless Entry	99-00 R/L	16637320-1	#.3	34.50
		01-03 R	15053682	#.3	106.67
		L	15068499	#.3	103.61
	w/o Keyless Entry	R/L	16637318-9	#.3	34.50
	Actuator, Door Lock	R/L	25664287-8	#.2	60.46
	#w/Trim Panel Removed				
2	Rod, Lock	99-00 R	15705522		1.82
		L	15048591		1.82
		01-03 R/L	15048592-1		1.82
3	Rod, Inside Handle	R/L	15705524-5		.74
4	Rod, Lock Cylinder	R/L	15705626-7		.30
5	Rod, Outside Handle	R/L	15705528-7		.68
6	Striker, Center	R/L	16640915	.2	11.05
7	Handle, Inside				
	1999-00	R/L	15760298-7	#.3	10.23
	2001-03				
	Chevrolet	R/L	15760298-7	#.3	10.23
	GMC				
	Sierra	R/L	15760298-7	#.3	10.23
	Sierra C3, Sierra Denali	R/L	15029904-3	#.3	22.93
	#w/Trim Panel Removed				
8	Handle, Outside	R/L	15034986-5	#.3	19.81
9	Cyl, Lock (Uncoded)	99-00 R/L	12457616	#.3	30.30
		01-03 R/L	88937321	#.3	25.98
	#R&R One Side Complete, w/Trim Panel Removed				
10	Hinge, Upper Front Door				
	Door Side	R/L	12472844-3	#1.5	101.69
	Body Side	R/L	12477888-7	#2.7	101.69
11	Hinge, Lower Front Door				
	Door Side	R/L	12472844-3	#1.5	101.69
	Body Side	R/L	12477888-7	#2.7	101.69
	#w/Door Removed, R&R Upper & Lower One Side Deduct .5, Body Side Hinge is w/Fender Removed				
12	Check, Door	R/L	15768685	#.3	19.15
	#w/Trim Panel Removed				
13	Weatherstrip, Door				
	Std Cab	R/L	15063155	.6	42.92
	Extended Cab				
	1999	R	15063153	.6	44.34
		L	15063155	.6	42.92
	2000				
	3 Door	R	15063153	.6	44.34
		L	15063155	.6	42.92
	4 Door	R	15063153	.6	44.34
		L	15063154	.6	44.85
	2001-03	R	15063153	.6	44.34
		L	15063154	.6	44.85
	Crew Cab	R/L	15063155	.6	42.92
14	W/Strip, Drip				
	Std Cab	R	15744718	.3	23.59
		L	15744717	.3	23.29
	Extended Cab				
	1999	R	15044908	.3	23.59
		L	15744717	.3	23.29
	2000				
	3 Door	R	15044908	.3	23.59
		L	15744717	.3	23.29
	4 Door	R	15044908	.3	23.59
		L	15054569	.3	23.59
	2001-03	R	15044908	.3	23.59
		L	15054569	.3	23.59

GLASS & PARTS

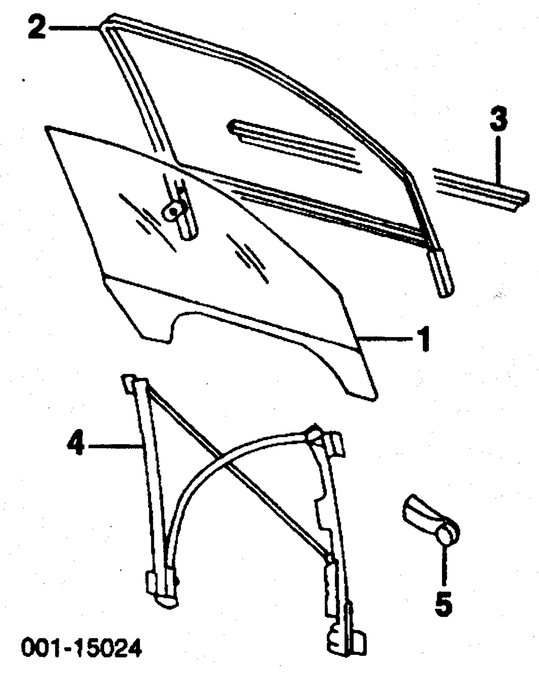

1	Glass, Front Door				
	Chevrolet, GMC	99-02 R/L	15758048-7	1.3	201.27
		03 R/L	15181039-8	1.3	201.27
	NAGS (Green)	R	DD09479GTN	1.3	482.95
		L	DD09480GTN	1.3	482.95
2	Run, Glass	R/L	15065170-1	#.2	58.17
	#w/Door Glass Removed				
3	Moulding, Outer Belt-See Exterior Trim Section				
4	Regulator				
	Manual	R	15077852	#1.0	114.44
		L	15077851	#1.0	112.20
	Power	R	15095844	#1.1	236.00
		L	15077853	#1.1	237.60
	#Deduct .8 w/Door Glass Removed				
5	Handle, Window Regulator	R/L	15705526	.1	6.58

REAR DOOR

Use Procedure Explanations 16 and 28 with the following text.

SHEET METAL EXTENDED CAB

Refinish Door Outside	R/L	2.4
Add for Jambs & Interior	R/L	1.0
R&I Door Assy	R/L	.8
Add to R&I Door Assy		
w/Pwr Windows	R/L	.2
w/Pwr Locks	R/L	.2
Add to R&R Door Shell		
w/Wiring Harness	R/L	.4

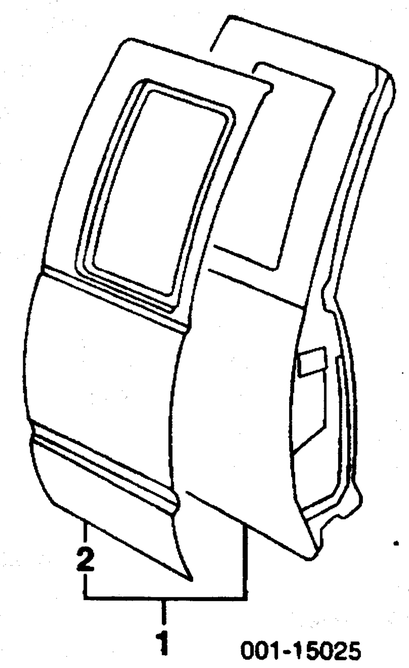

1	Shell, Door¶	R	15017365	#4.5	500.34
		L	12476244	#4.5	499.32
	¶When Replacing Door Shell, Door Side Hinges Must Also Be Replaced				
	#Includes Replacing Door Side Hinges				
2	Panel, Door Repair-Serviced w/Door Shell				

SHEET METAL CREW CAB

Refinish Door Outside	R/L	2.6
Add for Jambs & Interior	R/L	1.0
Add for Jambs	R/L	.5
R&I Door Assy	R/L	.8
Add to R&I Door Assy		
w/Pwr Windows	R/L	.2
w/Pwr Locks	R/L	.2
Section Door Repair Panel	R/L	#6.0
#Includes R&I/R&R Rear Door Glass		

Labor Times Shown are for Replacement with New OEM Undamaged Parts on New Undamaged Vehicles.
Comments or suggestions? Need assistance? Call 1-800-854-7030 or 858-578-6550. Ext. 8220. Fax 1-888-256-7969 or 858-549-0629.

Add to R&R Door Shell or Door Repair Panel
w/Wiring Harness ..... R/L .4

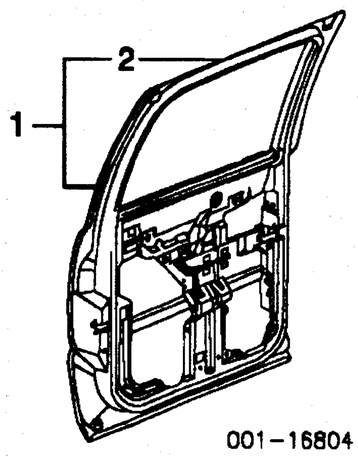

001-16804

1 **Shell Assy, Door¶**	R/L	12476145-6	#4.5	500.34
¶When Replacing Door Shell, Door Side Hinges Must Also Be Replaced				
#Includes Replacing Door Side Hinges				
2 **Panel, Door Repair¶**	R/L	15713036-5	#7.0	167.80
¶Included w/Door Shell Assy				
#Includes R&I/R&R Rear Door Glass				

EXTERIOR TRIM
EXTENDED CAB

Refinish Side Moulding ..... R/L .4

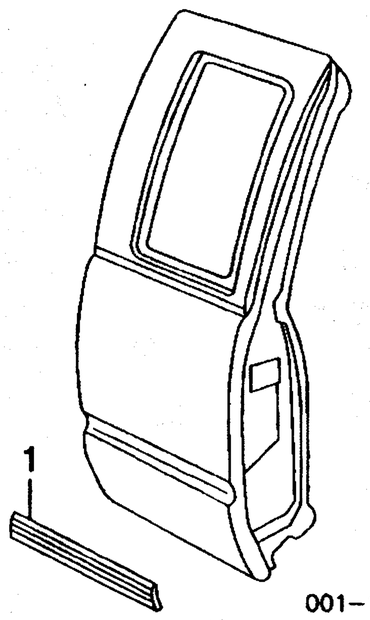

001-15027

1 **Moulding, Side (Adhesive)**				
Chevrolet				
Black	03 R/L	15061302-1	.2	42.37
Black/Chrome	R	15045303	.2	19.32
	L	15745223	.2	18.10
Copper	R	15005162	.2	19.32
	L	88937515	.2	19.12
Paint to Match	99-02 R	88937514	.2	0.00
	L	88937515	.2	19.12
	03 R/L	88979828-9	.2	42.37
GMC				
Sierra				
1999				
Black	R	15001880	.2	18.10
	L	15001879	.2	18.51
Chrome	R	15744372	.2	28.07
	L	15744373	.2	23.80
2000				
3 Door				
Black	R	15001880	.2	18.10
	L	15001879	.2	18.51
Chrome	R	15744372	.2	28.07
	L	15744373	.2	23.80
4 Door				
Black	R	15001880	.2	18.10
	L	15745219	.2	18.10
Chrome	R	15744372	.2	28.07
	L	15745217	.2	25.42
2001-03				
Black	01-02 R	15001880	.2	18.10
	L	15745219	.2	18.10
	03 R/L	15085465	.2	42.37
Chrome	01-02 R	15744372	.2	28.07
	L	15745217	.2	25.42
	03 R/L	15085467	.2	42.37
Sierra C3, Sierra Denali				
Black	R/L	15085461	.2	46.37
Paint to Match	R/L	88937189-8	.2	31.22

EXTERIOR TRIM
CREW CAB

Refinish Side Moulding ..... R/L .4
R&I Outer Belt Moulding ..... R/L .2

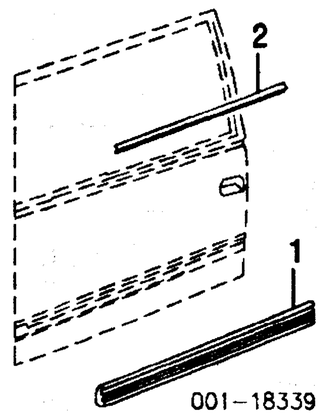

001-18339

1 **Moulding, Side (Adhesive)**				
Chevrolet				
Black	R/L	15061234-3	.2	24.61
Black/Chrome	R	15037233	.2	24.61
	L	15005427	.2	24.61
Paint to Match	01-02 R/L	88937518-9	.2	24.61
	03 R/L	88979830-1	.2	24.61
GMC				
Black	01-02 R/L	15001887	.2	21.76
	03 R/L	15085455	.2	57.63
Chrome	01-02 R/L	15001885	.2	37.73
	03 R/L	15085453	.2	57.63
2 **Moulding, Outer Belt**	R	15761644	.2	29.08
	L	15761645	.2	30.92

INTERIOR TRIM
EXTENDED CAB

R&I Trim Panel ..... R/L .4

NOTE: All Parts in this section are included in R&R Trim Panel unless noted otherwise.

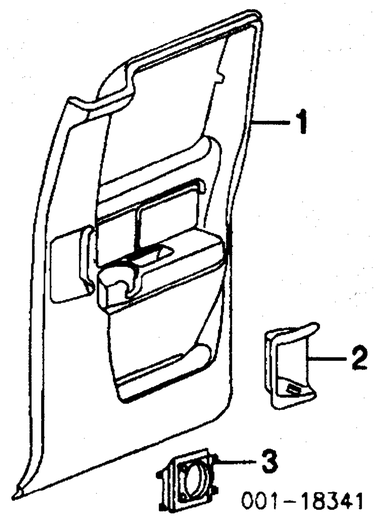

001-18341

1 **Panel, Door Trim¶**				
1999				
w/RPO-YE9	R	15768364	.5	232.70
w/o RPO-YE9	R	15768360	.5	232.70
2000				
3 Door				
w/RPO-YE9	R	15768364	.5	232.70
w/o RPO-YE9	R	15768360	.5	232.70
4 Door				
w/RPO-YE9	R	15768364	.5	232.70
	L	15768369	.5	232.70
w/o RPO-YE9	R	15768360	.5	232.70
	L	15768374	.5	232.70
2001-03				
w/RPO-YE9	R	15768367	.5	226.25
	L	15768372	.5	232.70
w/o RPO-YE9	R	15768362	.5	232.70
	L	15768376	.5	232.70
2 **Bezel, Inside Handle¶**				
1999	R	15043506	.2	6.79
2000				
3 Door	R	15043506	.2	6.79
4 Door	R	15043506	.2	6.79
	L	15754302	.2	6.53
2001-02	R	15043506	.2	6.79
	L	15754302	.2	6.53
2003	R/L	15051577-6	.2	3.47
¶Order by Application				
Shield, Moisture	R	15045510	#	14.75
	L	15047591	#	14.75
3 **Speaker**				
1999-02	R/L	15756874	#.2	24.00
2003				
w/Bose Speaker System	R/L	15180373	#.2	56.00
w/o Bose Speaker System	R/L	15071125	#.2	33.94
#w/Trim Panel Removed, Not Included in R&R Trim Panel				

INTERIOR TRIM
CREW CAB

R&I Trim Panel ..... R/L .4

NOTE: All Parts in this section are included in R&R Trim Panel unless noted otherwise.

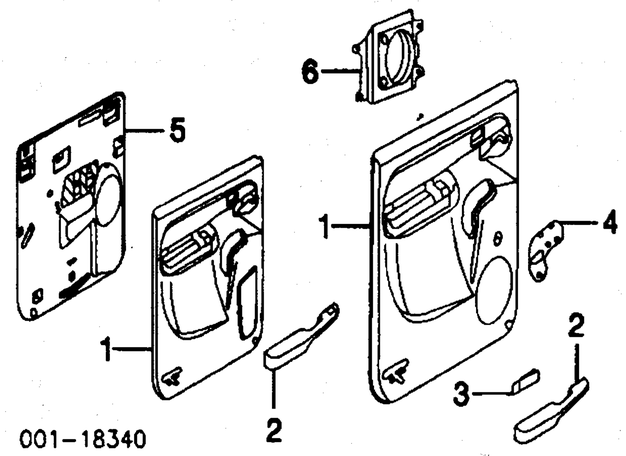

001-18340

1 **Panel, Door Trim¶**				
2001-02				
Chevrolet				
w/RPO-YE9	R/L	15086582-1	.5	249.47
w/o RPO-YE9	R/L	15757914-3	.5	225.26
GMC				
w/RPO-YE9	R	15086590	.5	249.47
	L	15086589	.5	257.70
w/o RPO-YE9	R/L	15757914-3	.5	225.26
2003				
w/RPO-YE9	R	15183055	.5	389.28
	L	15179064	.5	389.28
w/o RPO-YE9	R/L	15757918	.5	232.70
2 **Armrest**				
2001-02¶				
w/RPO-YE9	R/L	15062474-3	.2	62.79
w/o RPO-YE9	R/L	15757906-5	.2	62.79
2003				
Graphite	R/L	15062473-4	.2	62.79
Neutral				
w/RPO-YE9	R	15052613	.2	62.79
	L	15052612	.2	60.79
w/o RPO-YE9	R/L	15757910-09	.2	62.79
Pewter	R/L	15091857-6	.2	0.00
¶Order by Application				
3 **Lamp, Courtesy**				
w/RPO-YE9	R/L	15021518-7		14.10
Reflector, Warning				
w/o RPO-YE9	R/L	15961884		3.05
4 **Bezel, Inside Handle¶**	R/L	15763018-7		5.25
¶Pewter listed, Order by Application				
5 **Shield, Moisture**				
Man Windows	R/L	15769114-3	#	20.95
Pwr Windows	R/L	15162636-5	#	20.95
6 **Speaker**				
2001-02				
4 Speaker System (RPO-UQ5)				
Man Windows	R/L	15747925	#.2	45.60
Pwr Windows	R/L	15757322-1	#.2	60.00
Enhanced System (RPO-UQ3)	R/L	15757322-1	#.2	60.00
2003				
4 Speaker System	R/L	15071092	#.2	0.00
Enhanced System				
w/Bose Speaker System	R/L	15054681-0	#.2	57.60
w/o Bose Speaker System	R/L	15071090-89	#.2	0.00
#w/Trim Panel Removed, Not Included in R&R Trim Panel				

HARDWARE
EXTENDED CAB

Refinish Upper Rear Door Hinge
Door Side ..... R/L .2
Body Side ..... R/L .2
Refinish Lower Rear Door Hinge
Door Side ..... R/L .2
Body Side ..... R/L .2
R&I Outside Handle ..... R/L #.7
#Includes R&I Trim Panel

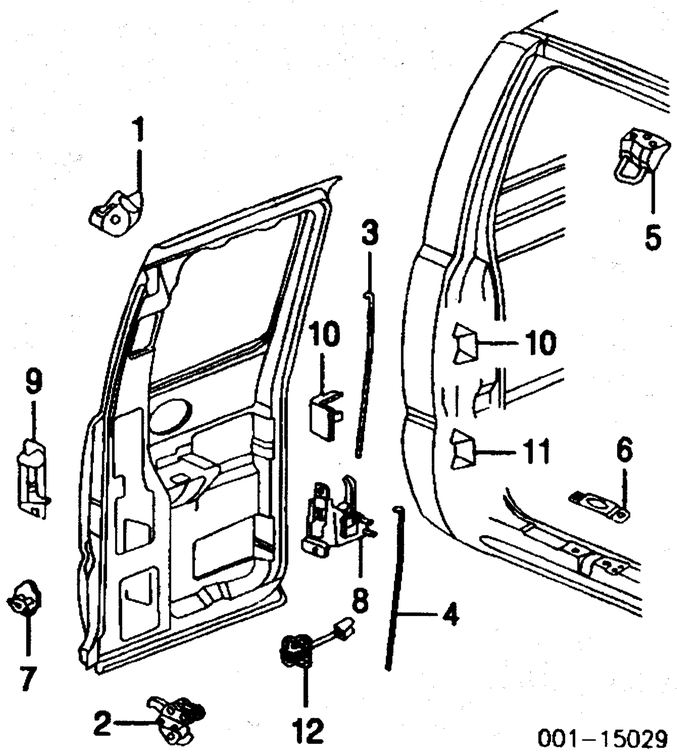

001-15029

1 **Latch, Upper Door**

Procedure Explanation Pages Must Be Used with the Above Text for an Accurate Damage Report.
Comments or suggestions? Need assistance? Call 1-800-854-7030 or 858-578-6550. Ext. 8220. Fax 1-888-256-7969 or 858-549-0629.

REAR DOOR Cont'd

HARDWARE

EXTENDED CAB Cont'd

1999	R	15057688	#.3	31.49
2000				
3 Door	R	15057688	#.3	31.49
4 Door	R/L	15057688-7	#.3	31.49
2001-03	R/L	15057688-7	#.3	31.49
2 Latch, Lower Door				
1999	R	15063698	#.3	31.49
2000				
3 Door	R	15063698	#.3	31.49
4 Door	R/L	15063698	#.3	31.49
2001-03	R/L	15063698	#.3	31.49
#w/Trim Panel Removed				
3 Rod, Upper Door Latch				
1999	R	15722180		5.75
2000				
3 Door	R	15722180		5.75
4 Door	R	15722180		5.75
	L	15019736		5.75
2001-03	R	15722180		5.75
	L	15019736		5.75
4 Rod, Lower Door Latch				
1999	R	15706493		5.75
2000				
3 Door	R	15706493		5.75
4 Door	R	15706493		5.75
	L	15019735		5.75
2001-03	R	15706493		5.75
	L	15019735		5.75
5 Striker, Upper Door Latch				
1999	R	15706497	.2	8.97
2000				
3 Door	R	15706497	.2	8.97
4 Door	R	15706497	.2	8.97
	L	15019733	.2	8.97
2001-03	R	15706497	.2	8.97
	L	15019733	.2	8.97
6 Striker, Lower Door Latch				
1999	R	15706499	.2	11.90
2000				
3 Door	R	15706499	.2	11.90
4 Door	R	15706499	.2	11.90
	L	15019734	.2	8.97
2001-03	R	15706499	.2	11.90
	L	15019734	.2	8.97
7 Striker, Center-See Front Door Section				
8 Handle, Inside Door				
1999	R	15035075	#.2	34.82
2000				
3 Door	R	15035075	#.2	34.82
4 Door	R	15035075	#.2	34.82
	L	15019737	#.2	34.82
2001-03				
Chevrolet	R	15035075	#.2	34.82
	L	15019737	#.2	34.82
GMC				
Sierra	R	15035075	#.2	34.82
	L	15019737	#.2	34.82
Sierra C3, Sierra Denali	R/L	15755398-9	#.2	78.47
9 Handle, Outside				
1999	R	15758171	#.3	26.63
2000				
3 Door	R	15758171	#.3	26.63
4 Door	R/L	15758171-2	#.3	26.63
2001-03	R/L	15758171-2	#.3	26.63
#w/Trim Panel Removed				
10 Hinge, Upper Rear Door				
1999				
Door Side	R	12472846	#1.5	101.69
Body Side	R	12472840	#2.0	101.69
2000				
3 Door				
Door Side	R	12472846	#1.5	101.69
Body Side	R	12472840	#2.0	101.69
4 Door				
Door Side	R	12472846	#1.5	101.69
	L	12476259	#1.5	135.61
Body Side	R	12472840	#2.0	101.69
	L	12476249	#2.0	101.69
2001-03				
Door Side	R	12472846	#1.5	101.69
	L	12476259	#1.5	135.61
Body Side	R	12472840	#2.0	101.69
	L	12476249	#2.0	101.69
11 Hinge, Lower Rear Door				
1999				
Door Side	R	12472846	#1.5	101.69
Body Side	R	12472840	#2.0	101.69
2000				
3 Door				
Door Side	R	12472846	#1.5	101.69
Body Side	R	12472840	#2.0	101.69
4 Door				
Door Side	R	12472846	#1.5	101.69
	L	12476259	#1.5	135.61
Body Side	R	12472840	#2.0	101.69
	L	12476249	#2.0	101.69
2001-03				
Door Side	R	12472846	#1.5	101.69
	L	12476259	#1.5	135.61
Body Side	R	12472840	#2.0	101.69
	L	12476249	#2.0	101.69
#w/Door Removed, R&R Upper & Lower One Side Deduct .5				
12 Check, Door				
1999	R	15037195	#.2	15.30
2000				
3 Door	R	15768687	#.2	18.68
4 Door	R/L	15768687	#.2	18.68
2001	R/L	15768687	#.2	18.68
2002-03	R/L	15768687	#.2	18.68
#w/Trim Panel Removed				

HARDWARE CREW CAB

Refinish Upper Rear Door Hinge			
Door Side	R/L	.2	
Body Side	R/L	.2	
Refinish Lower Rear Door Hinge			
Door Side	R/L	.2	
Body Side	R/L	.2	
R&I Outside Handle	R/L	#.7	
#Includes R&I Trim Panel			

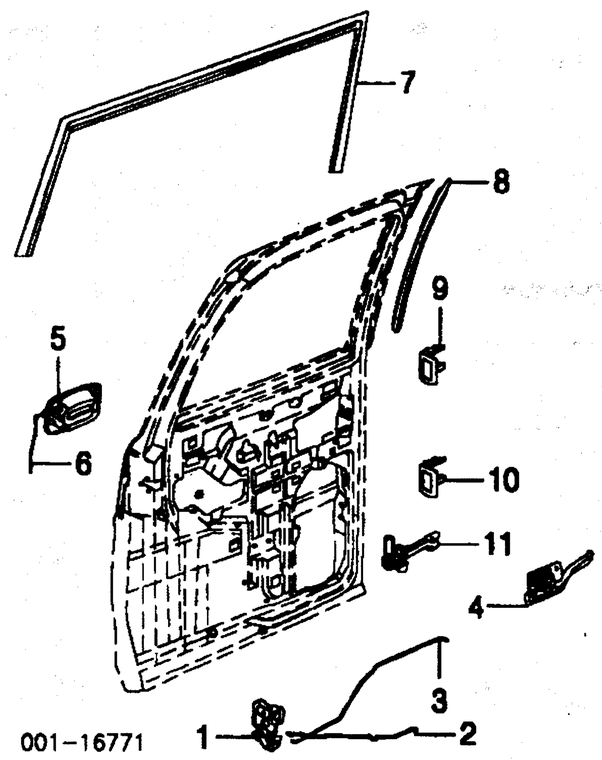

1 Latch, Door				
Man Lock	R/L	15770052-3	#.3	49.92
Pwr Locks	R/L	15068503-4	#.3	73.15
#w/Trim Panel Removed				
2 Rod, Inside Handle	R/L	15761422-3		1.82
3 Rod, Lock	R/L	15721562-1		1.82
4 Handle, Inside	R/L	15760298-7	#.2	10.23
5 Handle, Outside	R/L	15721572-1	#.3	23.17
#w/Trim Panel Removed				
6 Rod, Outside Handle	R/L	15721570-69		1.82
7 W/Strip, Upper Aux	R	15085947	.2	42.71
	L	15168807	.2	42.71
8 W/Strip, Front Aux	R/L	15766602-3	.2	5.80
W/Strip, Door	R/L	15752299	.2	18.51
9 Hinge, Upper Door				
Door Side	R/L	12476452-1	#1.5	101.69
Body Side	R/L	12476450-49	#2.0	101.69
10 Hinge, Lower Door				
Door Side	R/L	12476452-1	#1.5	101.69
Body Side	R/L	12476450-49	#2.0	101.69
#w/Door Removed, R&R Upper & Lower One Side Deduct .5				
11 Check, Door	R/L	15768689	#.2	19.04
#w/Trim Panel Removed				

GLASS & PARTS EXTENDED CAB

R&I Door Glass & Frame	R/L	#1.8	
#Includes Clean Up Old Adhesive as Necessary			

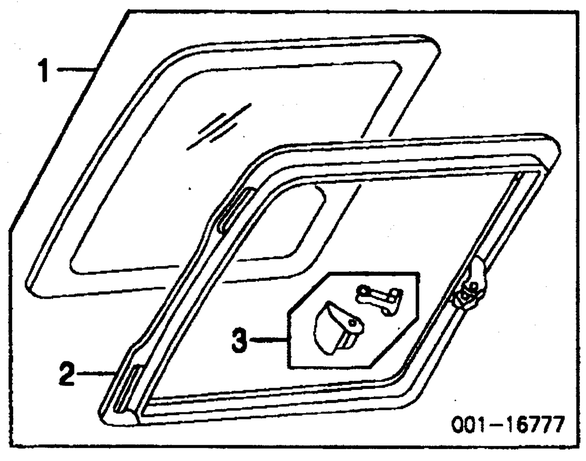

1 Glass Assy, Door				
Chevrolet, GMC				
Tint				
1999	R	88939710	#1.6	273.86
2000				
3 Door	R	88939710	#1.6	273.86
4 Door	R	88939710	#1.6	273.86
	L	88935198	#1.6	269.30
2001-03	R/L	88939710-09	#1.6	273.86
Privacy				
1999	R	88935201	#1.6	273.86
2000				
3 Door	R	88935201	#1.6	273.86
4 Door	R	88935201	#1.6	273.86
	L	88939711	#1.6	273.86
2001-03	R	88935201	#1.6	273.86
	L	88939711	#1.6	273.86
NAGS				
1999				
Green	R	DQ09481GTY	#1.6	808.15
2000				
3 Door				
Green	R	DQ09481GTY	#1.6	808.15
4 Door				
Green	R/L	DQ09481-2GTY	#1.6	808.15
Gray Privacy	R/L	DQ09481-2YPY	#1.6	958.50
2001-03				
Green	R/L	DQ09481-2GTY	#1.6	808.15
Gray Privacy	R/L	DQ09481-2YPY	#1.6	958.50
2 Frame, Door Glass¶				
1999	R	12473012	#1.6	64.37
2000				
3 Door	R	12473012	#1.6	64.37
4 Door	R/L	12473012-1	#1.6	64.37
2001-03-Serviced w/Door Glass Assy				
#R&R One Side Complete, Includes Clean Up Old Adhesive as Necessary				
3 Latch, Door Glass¶				
1999	R	12474945	.2	12.92
2000				
3 Door	R	12474945	.2	12.92
4 Door	R/L	12474945	.2	12.92
2001-03-Serviced w/Door Glass Assy				
¶Included w/Door Glass Assy				

GLASS & PARTS CREW CAB

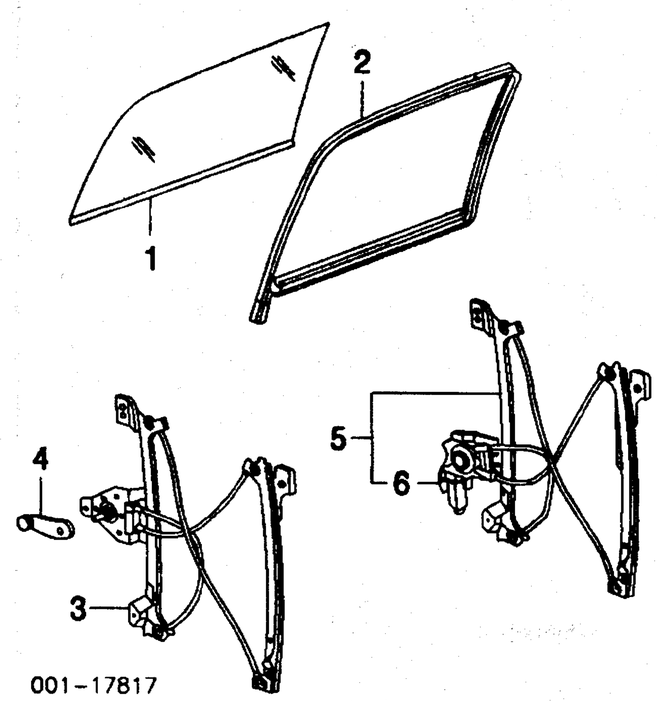

1 Glass, Rear Door				
Chevrolet				
w/Child Security Label				
Tint	R/L	15767468-7	#1.3	311.19
Privacy	R/L	15767470-69	#1.3	311.19
w/o Child Security Label				
Tint	R/L	15181070-69	#1.3	0.00
Privacy	R/L	15181068-7	#1.3	0.00
NAGS				
Green	R/L	DD09734-5GTN	#1.3	606.55
Gray Privacy	R/L	DD09734-5YPN	#1.3	647.15
#w/Power Windows Add .2				
2 W/Strip, Rear Window	R/L	15056804-3	#.2	30.41
#w/Door Glass Removed				
3 Regulator, Manual	R	15757403	#1.0	103.35
	L	15757402	#1.0	100.39
#Deduct .8 w/Door Glass Removed				
4 Handle, Window Regulator	R	15705526	.1	6.58
	L	15705525	.1	.74
5 Regulator Assy, Power	R/L	15077723-2	#1.1	165.75
#Deduct .8 w/Door Glass Removed				
6 Motor, Regulator¶	R/L	88937200-199	.6	70.86
¶Included w/Power Regulator Assy				

QUARTER GLASS

LEFT SIDE

R&I Quarter Glass Assy	#1.8	
#Includes Clean Up Old Adhesive as Necessary		

Illustration Located in Next Column

1 Glass Assy, Quarter				
Chevrolet, GMC				
Tint		88935198	#1.6	269.30
Privacy		88939711	#1.6	273.86
NAGS				
Green		DQ09482GTY	#1.6	808.15
Gray Privacy		DQ09482YPY	#1.6	958.50

Labor Times Shown are for Replacement with New OEM Undamaged Parts on New Undamaged Vehicles.
Comments or suggestions? Need assistance? Call 1-800-854-7030 or 858-578-6550. Ext. 8220. Fax 1-888-256-7969 or 858-549-0629.

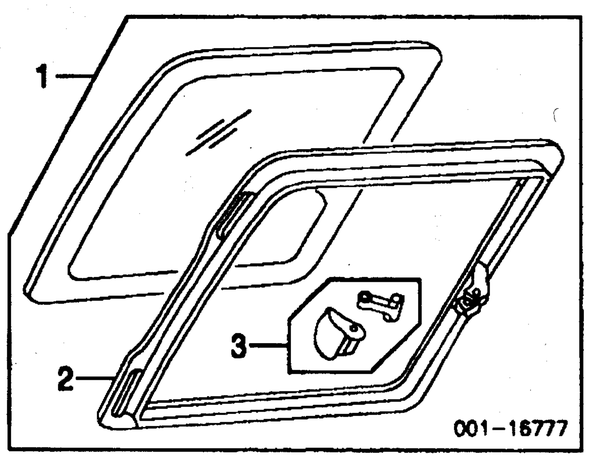

2	Frame, Quarter Glass¶	12473011	#1.8	64.37
	#Includes Clean Up Old Adhesive as Necessary			
3	Latch, Quarter Glass¶	12474945		12.92
	¶Included w/Quarter Glass Assy			

BACK WINDOW

Use Procedure Explanation 19 with the following text.

R&I Back Window ..... #2.4
#Includes Clean Up Old Adhesive as Necessary

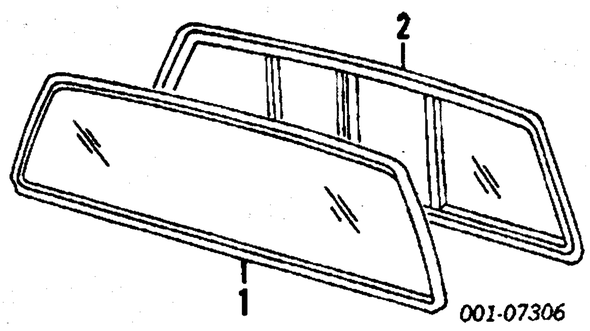

1	**Glass, Back Window Stationary**			
	Chevrolet, GMC			
	Tint			
	Heated	15770139	#2.0	754.17
	Non-Heated	15069252	#2.0	518.64
	Privacy			
	Heated 99	15770138	#2.0	754.17
	00-03	15069253	#2.0	432.20
	Non-Heated	15069251	#2.0	0.00
	NAGS			
	Green			
	Heated	DB09483GTY	#2.0	558.00
	Non-Heated	DB09484GTY	#2.0	548.30
	Gray Privacy			
	Heated	DB09483YPY	#2.0	608.95
	Non-Heated	DB09484YPY	#2.0	572.60
2	**Glass, Back Window Sliding**			
	Chevrolet, GMC	N.A.	#2.0	0.00
	NAGS			
	Green	DB09795GTY	#2.0	0.00
	Gray Privacy	DB09795YPY	#2.0	0.00
	#Includes Clean Up Old Adhesive as Necessary			

PICKUP BED

Use Procedure Explanations 21 and 28 with the following text.

SHEET METAL STEPSIDE

Refinish Box Assy Complete		#11.0
#Includes Refinishing Inside & Tailgate		
Refinish Side Outer Panel	R/L	3.2
Refinish Side Inner Panel	R/L	1.4
Refinish Front Panel (Complete)		2.3
Refinish Front Panel Inside		1.2
Refinish Floor Panel		#4.2
#Includes Refinish Floor Sill		
Refinish Floor Sill		1.0
Refinish Tailgate (Complete)		2.5
Refinish Tailgate Outside		2.0
Refinish Tailgate Inside		1.2
Refinish Fuel Door		.4
R&I Box Assy		2.5
R&I Tailgate		.3

Illustration Located in Next Column

1	**Box Assy**		12472826	3.5	3600.00
2	**Panel, Inner Side¶**	R	15758524	#9.0	330.51
		L	15758525	#9.5	330.51
	#Includes R&I Box Assy				
3	**Panel, Front¶**		15709844	#5.5	186.61
	#Includes R&I Box Assy, Deduct 1.0 w/Each Outer Side Panel Removed				
4	**Panel, Floor¶**		15763374	#20.5	605.29
	#Deduct 4.0 w/Each Inner Side Panel Removed				
	Sill, No. 1 Cross¶		15709852		103.12

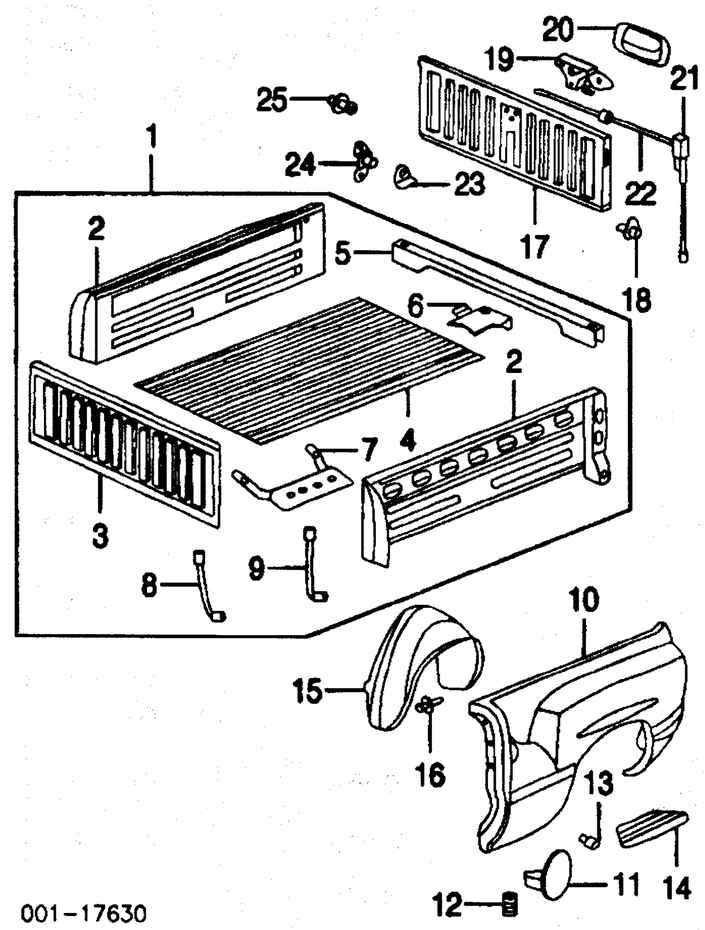

	Sill, No. 2 Cross¶		15709855		91.42
	Sill, No. 3 Cross¶		15709858		91.42
	Sill, No. 4 Cross¶		15709857		91.42
5	**Sill, Rear Cross¶**		12475636	#4.5	69.36
	#Deduct 1.0 w/Each Inner Side Panel Removed				
6	**Brkt, Rear Lamp Harness¶**	99-01	15034570		3.60
		02-03	15031996		4.10
7	**Bracket, Fender¶**	R/L	15758522-1	.4	67.42
8	**Brace, Lower Front¶**	R/L	15709846-7	.2	8.24
9	**Brace, Lower Rear¶**	R/L	15709848-9	.2	8.24
	¶Included w/Box Assy				
10	**Panel, Outer Side**	R	15758520	3.5	457.63
		L	15758519	4.0	457.63
11	**Door, Fuel**	L	15768696	.3	38.39
12	**Spring, Fuel Door**	L	15521575		3.68
13	**Bumper, Fuel Door**	L	15152450		.86
14	**Pad, Step**	R/L	15709894-3	.2	16.27
15	**Panel, Wheelhouse**	R/L	15709898-7	.4	42.92
16	**Retainer, Panel (10/Side)**	R/L	15149708		3.86
17	**Tailgate**		15063570	1.2	366.92
18	**Hinge, Gate Side**	R/L	15074252-3	#.2	10.46
	#w/Tailgate Removed				
19	**Handle, Tailgate Latch**		15997911	#.3	35.78
20	**Bezel, Handle**		15046512	#.3	7.20
	#R&R Complete				
21	**Latch w/Cable**	R	15756843	.4	38.30
		L	15756844	.4	37.23
22	**Rod, Latch**	99 R/L	15037202		4.56
		00-03 R/L	15046609		4.70
23	**Stop, Tailgate Theft Deterrent**				
	1999	R	15731235	.1	1.17
24	**Hinge, Bed Side**	R/L	15756846-5	#.2	6.68
	#w/Tailgate Removed				
25	**Striker, Latch**	R/L	15711129	.2	4.86

SHEET METAL FLEETSIDE 1500 PLASTIC BED

Refinish Side Panel Outside	R/L	3.2
Refinish Tailgate Outside		2.0
Refinish Fuel Door		.4
R&I Box Assy		2.5
R&I Tailgate		.3

Illustration Located in Next Column

1	**Box Assy**		15068724	7.5	3441.40
2	**Panel, Wheelhouse¶**	R/L	15769604-3	.4	96.41
3	**Filler, Side Panel¶**	R/L	15769600-1		17.80
4	**Shield, Side Panel¶**	R/L	15723726-5	.3	14.95
	¶Included w/Box Assy				
5	**Panel, Outer Side**	R	15068706	3.5	644.24
		L	15068707	4.0	644.24
6	**Door, Fuel**	L	15768696	.3	38.39
7	**Spring, Fuel Door**	L	15521575		3.68
8	**Bumper, Fuel Door**	L	15152450		.86
9	**Bolt, Tie Down Bracket (6)**		15723737		7.22
10	**Tailgate**		15078549	1.2	813.56
11	**Hinge, Gate Side**	R/L	15074252-3	#.2	10.46
	#w/Tailgate Removed				
12	**Handle, Tailgate Latch¶**		15997911	#.3	35.78
13	**Bezel, Handle¶**		15046512	#.3	7.20
	¶Black listed, Order by Application				
	#R&R Complete				
14	**Latch w/Cable**	R	15756844	.4	37.23
		L	15756843	.4	38.30
15	**Rod, Latch**	R/L	N.A.		0.00

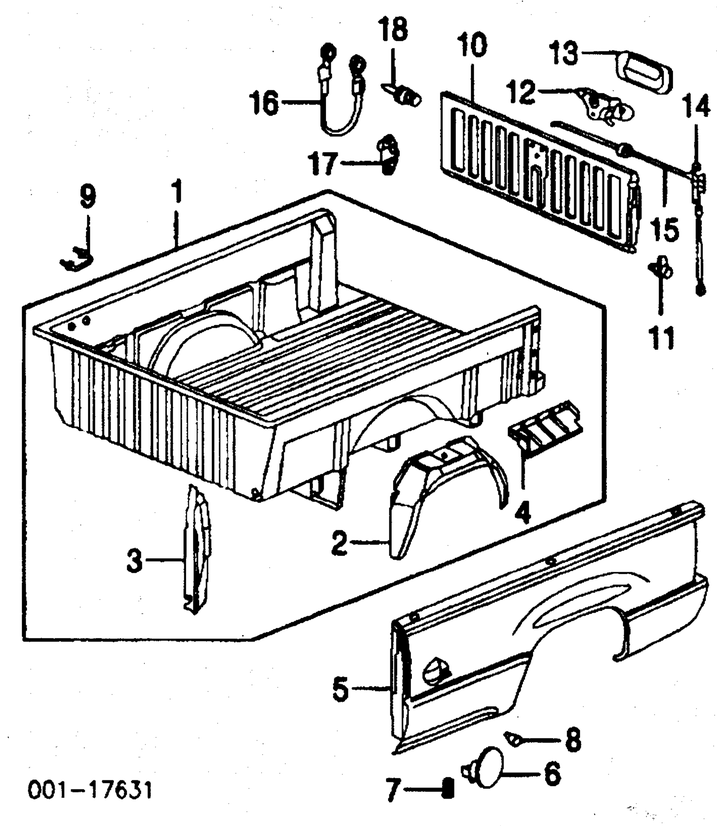

16	**Cable, Tailgate**	R/L	15992970	.2	22.98
17	**Hinge, Bed Side**	R/L	15756846-5	#.2	6.68
	#w/Tailgate Removed				
18	**Striker, Latch**	R/L	15711129	.2	4.86

SHEET METAL FLEETSIDE 1500 W/4WS METAL BED

Refinish Box Assy Complete		#11.0
#Includes Refinish Inside & Tailgate		
Refinish Outer Side Panel	R/L	3.5
Add to Edge Panel	R/L	.5
Refinish Inner Side Panel	R/L	1.4
Refinish Inner Wheelhouse Panel	R/L	1.0
Refinish Front Panel (Complete)		2.3
Refinish Front Panel Inside		1.2
Refinish Floor Panel		#4.2
#Includes Refinish Rear Cross Sill		
Refinish Rear Cross Sill		1.0
Refinish Fuel Door		#.4
#Included in Refinish Box Assy Complete or Left Outer Side Panel		
Refinish Tailgate (Complete)		2.5
Refinish Tailgate Outside		2.0
Refinish Tailgate Inside		1.2
R&I Box Assy		2.5
R&I Tailgate		.3

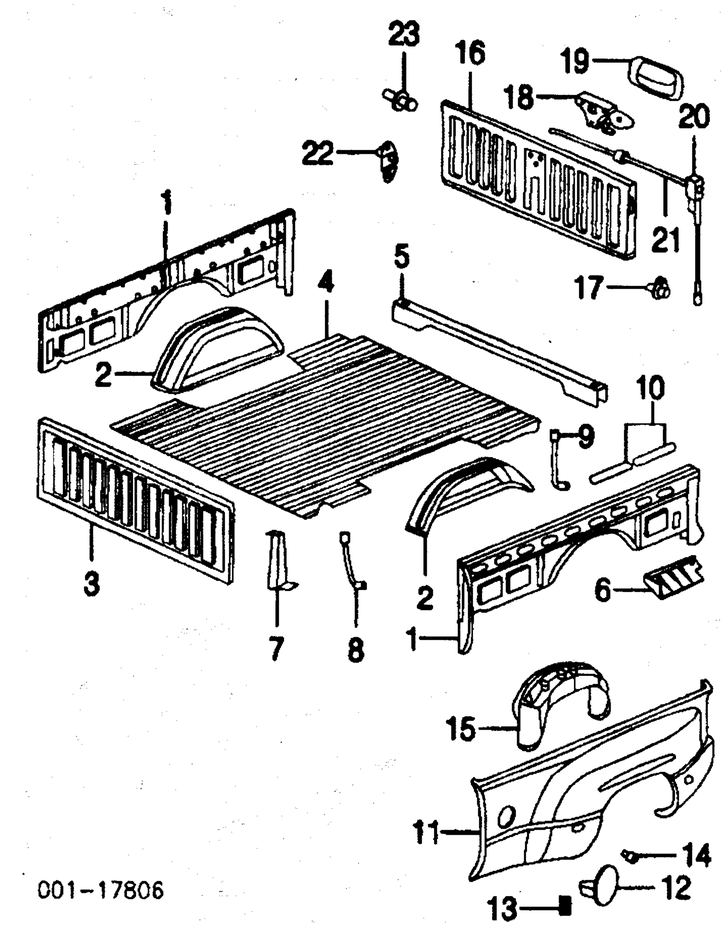

1	**Panel, Inner Side**	R	15097126	4.5	644.24
		L	15097958	4.5	644.24
2	**Panel, Inner Wheelhouse**	R/L	15761951	2.0	98.75
3	**Panel, Front**		15711104	#5.5	161.59
	#Includes R&I Box Assy, Deduct 1.0 w/Each Outer Side Panel Removed				
4	**Panel, Floor**		15097634	#20.5	0.00
	#Deduct 4.0 w/Each Inner Side Panel Removed				
5	**Sill, Rear Cross**		12475635	#4.5	93.05

PICKUP BED Cont'd

SHEET METAL

FLEETSIDE
1500 W/4WS
METAL BED Cont'd

#Deduct 1.0 w/Each Inner Side Panel Removed

6	Shield, Side Panel	R/L	N.A.	.3	0.00
7	Brace, Front Side Panel	R/L	15711212-3	.1	8.24
8	Brace, Center Side Panel	R/L	15711212-3	.2	8.24
9	Brace, Rear Side Panel	R/L	15711212-3	.2	8.24
10	Retainer, Side Panel Reinf (2/Side)	R/L	11518121		1.65
11	Panel, Outer Side	R	15165439	#2.0	457.63
		L	15165438	#2.5	457.63
	#Does Not Include R&I Box Assy, Tailgate Assy or Rear Bumper Assy				
12	Door, Fuel	L	15768696	.3	38.39
13	Spring, Fuel Door	L	15521575		3.68
14	Bumper, Fuel Door	L	15152450		.86
15	Panel, Outer Wheelhouse	R/L	15096841-0	.5	130.17
16	Tailgate		15063569	1.2	279.36
17	Hinge, Gate Side	R/L	15074252-3	#.2	10.46
	#w/Tailgate Removed				
18	Handle, Tailgate Latch				
	Black		15997911	#.3	35.78
	Green		15755402	#.3	30.97
	Pewter		15755401	#.3	30.97
19	Bezel, Handle				
	Black		15046512	#.3	7.20
	Green		15752896	#.3	18.90
	Pewter		15752897	#.3	18.90
	#R&R Complete				
20	Latch w/Cable	R	15756843	.4	38.30
		L	15756844	.4	37.23
21	Rod, Latch	R/L	15046610		4.70
22	Hinge, Bed Side	R/L	15756846-5	#.2	6.68
	#w/Tailgate Removed				
23	Striker, Latch	R/L	15711129	.2	4.86

SHEET METAL
FLEETSIDE
1500, 2500 W/O 4WS
METAL BED

Refinish Box Assy Complete		
6-1/2 Foot Bed		#11.0
8 Foot Bed		#12.5
#Includes Refinish Inside & Tailgate		
Refinish Outer Side Panel		
6-1/2 Foot Bed	R/L	3.2
Add for Inside	R/L	1.4
8 Foot Bed		
1500, 2500	R/L	3.6
Add for Inside	R/L	1.6
Refinish Wheelhouse Panel	R/L	1.0
Refinish Front Panel (Complete)		2.3
Refinish Front Panel Inside		1.2
Refinish Floor Panel		
6-1/2 Foot Bed		#4.2
8 Foot Bed		#4.5
#Includes Refinish Floor Sill		
Refinish Floor Sill		1.0
Refinish Tailgate (Complete)		2.5
Refinish Tailgate Outside		2.0
Refinish Tailgate Inside		1.2
Refinish Fuel Door		.4
Refinish Side Panel Flare	R/L	.6
R&I Box Assy		2.5
R&I Tailgate		.3
R&I Side Panel Flare	R/L	.3
Add to R&R Box or Fender To Drill for & Install Flare	R/L	.5

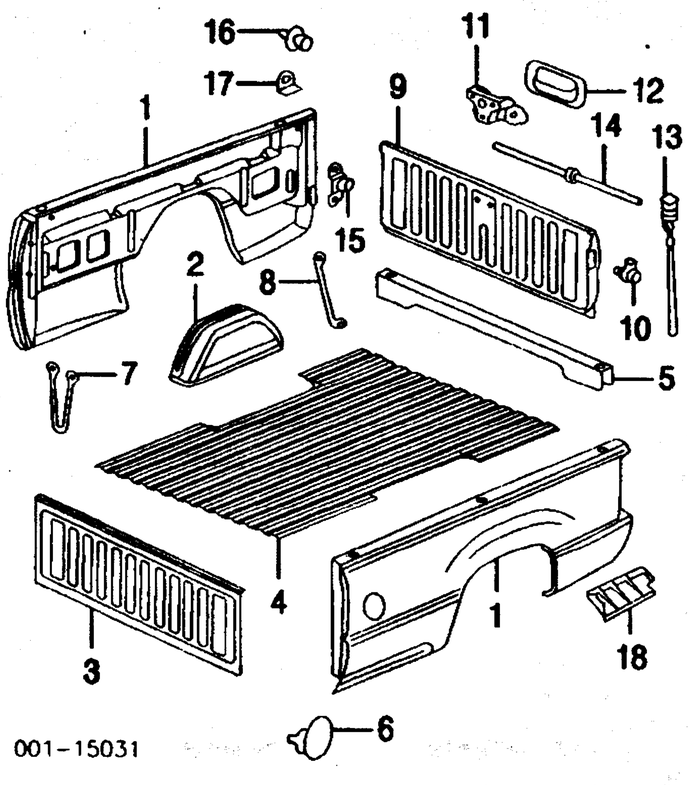

	Box Assy				
	6-1/2 Foot Bed		12472825	3.5	3600.00
	8 Foot Bed		12472827	3.5	3950.00
1	Panel, Outer Side¶				
	6-1/2 Foot Bed	R	15097126	#12.5	644.24
		L	15097958	#13.0	644.24
	8 Foot Bed	R	15062836	#14.0	644.24
		L	15072617	#14.5	644.24
	#Includes R&I Box Assy				
2	Panel, Inner Wheelhouse¶	R/L	15761951	2.0	98.75
3	Panel, Front¶		15711104	#5.5	161.59
	#Includes R&I Box Assy, Deduct 1.0 for Each Outer Side Panel Removed				
4	Panel, Floor¶				
	6-1/2 Foot Bed		15097634	#21.0	0.00
	#Deduct 9.0 for Each Outer Side Panel Removed				
	8 Foot Bed		15763376	#23.5	783.15
	#Deduct 10.5 for Each Outer Side Panel Removed				
5	Sill, Rear Floor¶		12475635	#4.5	93.05
	#Deduct 1.0 for Each Outer Side Panel Removed				
6	Door, Fuel¶	L	15768696	.3	38.39
	Spring, Fuel Door¶	L	15521575		3.68
	Bumper, Fuel Door¶	L	15711102		.61
7	Brace, Frt Side Panel¶	R/L	15711212-3	.1	8.24
8	Brace, Rear Side Panel¶	R/L	15072624-5	.2	7.42
	¶Included w/Box Assy				
9	Tailgate		15063569	1.2	279.36
10	Hinge, Gate Side	R/L	15074252-3	#.2	10.46
	#w/Tailgate Removed				
11	Handle, Tailgate Latch				
	1999-00		15997911	#.3	35.78
	2001-03				
	Chevrolet		15997911	#.3	35.78
	GMC				
	Sierra		15997911	#.3	35.78
	Sierra C3, Sierra Denali				
	Black		15997911	#.3	35.78
	Green		15755402	#.3	30.97
	Pewter		15755401	#.3	30.97
12	Bezel, Handle				
	1999-00		15046512	#.3	7.20
	2001-03				
	Chevrolet		15046512	#.3	7.20
	GMC				
	Sierra		15046512	#.3	7.20
	Sierra C3, Sierra Denali				
	Black		15046512	#.3	7.20
	Green		15752897	#.3	18.90
	Pewter		15752896	#.3	18.90
	#R&R Complete				
13	Latch w/Cable	R	15756843	.4	38.30
		L	15756844	.4	37.23
14	Rod, Latch	R/L	15046610		4.70
15	Hinge, Bed Side	R/L	15756846-5	#.2	6.68
	#w/Tailgate Removed				
16	Striker, Latch	R/L	15711129	.2	4.86
17	Stop, Tailgate Theft Deterrent 1999	R	15731235	.1	1.17
18	Shield, Side Panel				
	6-1/2 Foot Bed	R	15072621	.3	14.44
		L	15072620	.3	14.95
	8 Foot Bed	R	15072623	.3	14.44
		L	15072622	.3	14.95

SHEET METAL
FLEETSIDE
3500

Refinish Box Assy Complete		#12.5
#Includes Refinish Inside & Tailgate		
Refinish Side Panel Outside	R/L	3.8
Add to Edge Panel	R/L	.5
Refinish Inner Side Panel	R/L	2.0
Refinish Inner Wheelhouse Panel	R/L	1.0
Refinish Front Panel (Complete)		2.3
Refinish Front Panel Inside		1.2
Refinish Floor Panel		#4.5
#Includes Refinish Floor Sill		
Refinish Floor Sill		1.0
Refinish Tailgate (Complete)		2.5
Refinish Tailgate Outside		2.0
Refinish Tailgate Inside		1.2
Refinish Fuel Door		.4
R&I Box Assy		2.5
R&I Tailgate		.3
R&I Side Panel Flare	R/L	.3
Add to R&R Box or Fender To Drill for & Install Flare	R/L	.5

Illustration Located in Next Column

1	Box Assy	01-02	88934978	7.5	3596.70
		03	N.A.	7.5	0.00
2	Panel, Inner Side¶	R	15084319	4.5	644.24
		L	15061667	4.5	644.24
3	Panel, Inner Wheelhouse¶	R/L	15761951	2.0	98.75
4	Panel, Front¶		15711104	#5.5	161.59
	#Includes R&I Box Assy, Deduct 1.0 for Each Outer Side Panel Removed				
5	Panel, Floor¶		15064264	#23.5	922.07
	#Deduct 5.0 w/Each Inner Panel Removed				
6	Sill, Rear Cross¶		15061669	#4.5	135.59
	#Deduct 1.0 w/Each Inner Panel Removed				
7	Shield, Side Panel¶	R/L	N.A.	.3	0.00

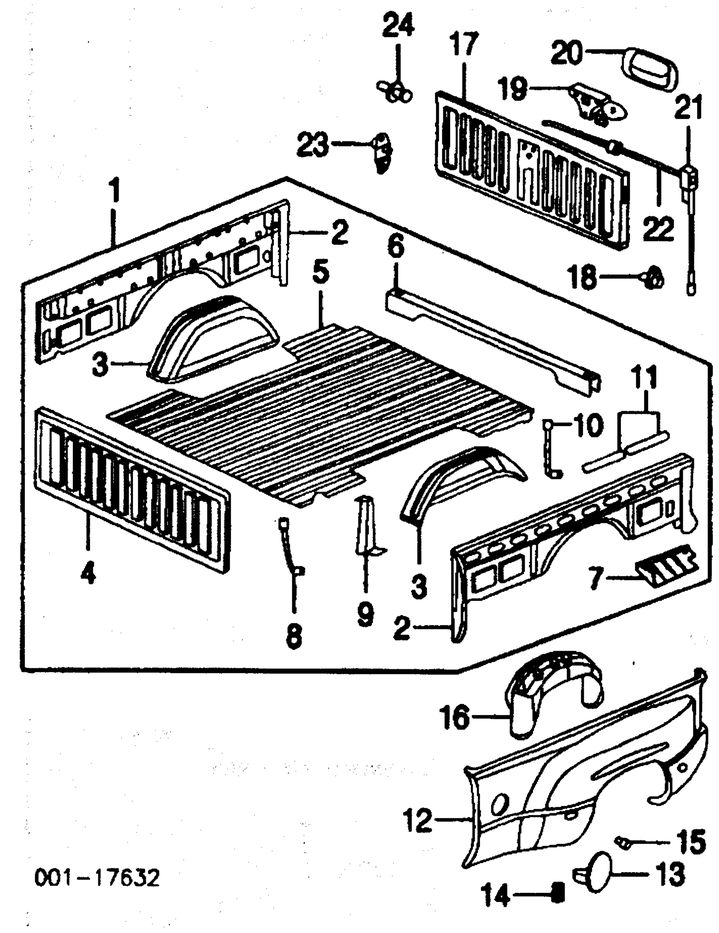

8	Brace, Front Side Panel¶	R/L	15711716-7	.1	8.03
9	Brace, Center Side Panel¶	R	15711132	.2	8.95
		L	15711715	.2	8.95
10	Brace, Rear Side Panel¶	R/L	15763958-7	.2	13.83
11	Retainer, Side Panel Reinf¶ (2/Side)	R/L	15761815		3.66
	Brace, Side Panel Reinf¶	R	15762532		20.95
		L	15762518		20.95
	¶Included w/Box Assy				
12	Panel, Outer Side	R	15772917	#2.0	726.61
		L	15772916	#2.5	726.61
	#Does Not Include R&I Box Assy, Tailgate Assy or Rear Bumper Assy				
13	Door, Fuel	L	15768696	.3	38.39
14	Spring, Fuel Door	L	15521575		3.68
15	Bumper, Fuel Door	L	15152450		.86
16	Panel, Outer Wheelhouse	R/L	15059820-1	.5	148.07
17	Tailgate		15063569	1.2	279.36
18	Hinge, Gate Side	R/L	15074252-3	#.2	10.46
	#w/Tailgate Removed				
19	Handle, Tailgate Latch		15997911	#.3	35.78
20	Bezel, Handle		15046512	#.3	7.20
	#R&R Complete				
21	Latch w/Cable	R	15756844	.4	37.23
		L	15756843	.4	38.30
22	Rod, Latch	R/L	15046610		4.70
23	Hinge, Bed Side	R/L	15756846-5	#.2	6.68
	#w/Tailgate Removed				
24	Striker, Latch	R/L	15711129	.2	4.86

EXTERIOR TRIM

Refinish Side Moulding	R/L	.4
Refinish Side Panel Flare	R/L	.6
R&I Side Panel Flare	R/L	.3
R&I Side Upper Moulding	R	
	L	.4
R&I Tailgate Spoiler		.4

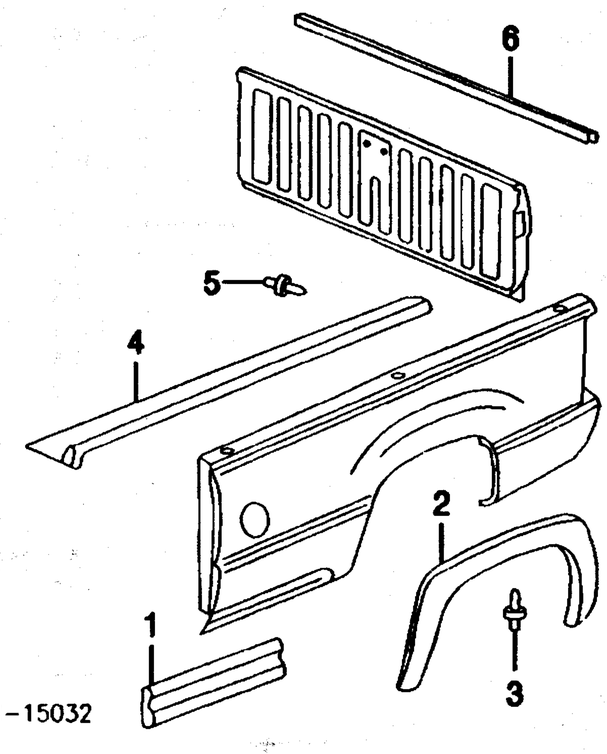

1	Moulding, Side (Adhesive)¶ Chevrolet 6-1/2 Foot Bed Black	R/L 15001883	.2	19.32

Labor Times Shown are for Replacement with New OEM Undamaged Parts on New Undamaged Vehicles.
Comments or suggestions? Need assistance? Call 1-800-854-7030 or 858-578-6550. Ext. 8220. Fax 1-888-256-7969 or 858-549-0629.

Black/Chrome	R/L	15045334-5	.2	19.32
Gold	R	15045326	.2	19.32
	L	88937513	.2	0.00
Gray	R	88937512	.2	19.32
	L	15045333	.2	19.32
Green	R/L	15045330-1	.2	19.32
Pewter	R	88937513	.2	0.00
	L	15045324	.2	19.32
Paint to Match	R	88937513	.2	0.00
	L	15045324	.2	19.32
8 Foot Bed				
Black/Chrome	R/L	15045548-7	.2	23.90
Gold	R/L	15045540-39	.2	23.90
Gray	R/L	15045546-5	.2	23.90
Green	R	15744964	.2	23.90
	L	N.A.	.2	0.00
Pewter	R	15045538	.2	23.90
	L	88937511	.2	0.00
Paint to Match	R	88937510	.2	23.90
	L	88937511	.2	0.00
GMC				
6-1/2 Foot Bed				
Sierra				
Black	R/L	15001883	.2	19.32
Chrome	R/L	15744376	.2	25.93
Sierra C3, Sierra Denali				
Paint to Match	R/L	88937227	.2	25.93
8 Foot Bed				
Black	R/L	15001884	.2	23.90
Chrome	R/L	15744377	.2	35.59
2 **Flare, Side Panel¶**				
Smooth Finish				
Black	R/L	15750002-1	.3	218.95
Paint to Match	R/L	15750002-1	.3	218.95
Textured Finish				
Black	R/L	15743196-5	.3	218.95
Paint to Match	R/L	15743196-5	.3	218.95
¶Order by Application				
3 **Retainer (5/Side)**	R/L	15149708	.3	3.86
4 **Moulding, Side Upper**				
Stepside	R/L	15760014-3	.4	55.83
Fleetside				
w/4WS				
Black	R/L	15095430-29	.4	0.00
Green	R/L	15095426-5	.4	0.00
Pewter	R/L	15095424-3	.4	0.00
w/o 4WS	R/L	15069488-9	.4	40.07
5 **Retainer (2/Side)**	R/L	15149708	.4	3.86
6 **Spoiler, Tailgate**				
Stepside		15728045	.4	55.67
Fleetside				
Base, SL Model		15096922	.4	42.97
LS, LT, SLE, SLT Model		15046605	.4	55.67

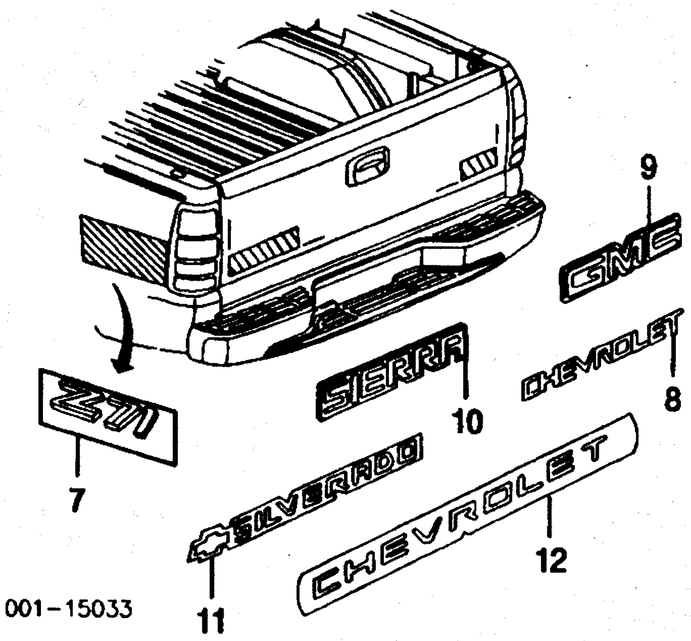

001-15033

7 **Decal**				
"Z71"	99 R/L	15707442	.4	9.76
	00-03 R/L	15758148	.4	9.76
"4x4"	R/L	15707440	.4	7.63
Nameplate (Adhesive)				
8 "CHEVROLET"		15998983	.2	31.42
9 "GMC"		15029627	.2	10.07
10 "SIERRA"				
w/Denali Pkg		15755397		16.17
w/o Denali Pkg	99-01	15707451	.2	10.37
	02-03	15755397	.2	16.17
11 "SILVERADO"		15153105	.2	20.95
Nameplate (Adhesive)				
"PRO-TEC Composite Box"		15748139	.2	5.69
12 **Applique, Chevrolet**				
Stepside				
Charcoal		15707449	.4	15.56
Silver		15707450	.4	15.56
Fleetside				
Charcoal		15707444	.4	16.37
Silver		15707445	.4	16.37

REAR SUSPENSION

Use Procedure Explanation 23 with the following text.

W/4WS

R&I Suspension/Axle Assy	m	2.9
Adjust Four Wheel Alignment		
2WD	m	2.1
4WD	m	2.3
Adjust Rear Wheel Alignment	m	1.0
Bleed Brake System	m	1.0

NOTE: R&I/R&R or O/H Does Not include alignment or bleed brake system.

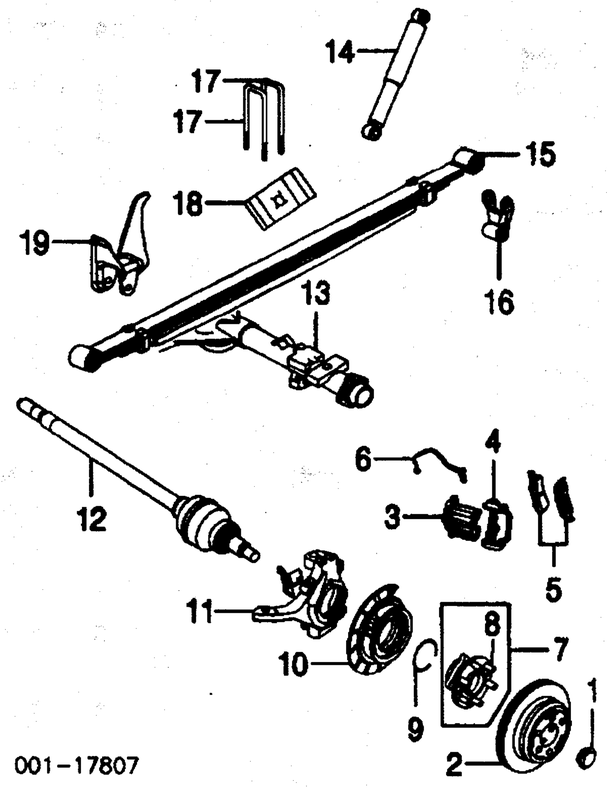

001-17807

1 **Cover, Dust**	R/L	15716207			1.73
2 **Rotor, Brake**	R/L	15712802	m	#.6	386.26
#R&R Both 1.0					
3 **Caliper, Brake¶**	R	18043521	m	#.5	■168.00
	L	18043520	m	#.5	■175.92
4 **Bracket, Caliper¶**	R/L	26092355	m	#.5	0.00
#R&R One Side Complete, w/Brake Rotor Removed Deduct .3, R&R Both Sides .8					
5 **Pad Set, Brake¶**	02	18044202	m	#1.0	■156.60
	03	18043346	m	#1.0	■131.88
¶Order by Application					
#w/Brake Caliper Removed Deduct .5					
6 **Hose, Brake**	R/L	15035859	m	#.3	89.82
#w/Brake Caliper Removed Deduct .2					
7 **Hub & Bearing Assy**	R/L	26083838	m	#1.3	377.82
#Includes R&R Brake Rotor, R&R Both 2.4					
8 **Stud, Wheel¶ (6/Side)**	R/L	15027048	m		2.32
¶Included w/Hub & Bearing Assy					
9 **Seal, Oil**	R/L	N.A.	m		0.00
10 **Plate, Backing**	R	26094847	m	#.2	52.89
	L	26094845	m	#.2	0.00
#w/Hub & Bearing Assy Removed					
11 **Knuckle, Steering**	R/L	26091749-50	m	#2.1	453.49
#Includes R&R Brake Rotor, Hub/Bearing Assy & Backing Plate, R&R Both 4.0					
12 **Shaft, Axle**	R/L	26098390	m	#.3	763.60
#w/Rear Steering Gear Assy & Steering Knuckle Removed					
13 **Housing, Axle**		26092640	m	#7.7	1089.91
#Includes R&R Brake Rotors, Hub Assemblies, Backing Plates, Steering Knuckles, Axle Shafts & Rear Steering Gear Assy					
14 **Absorber, Shock**					
Extended Cab	R/L	22400265	m	#.5	■299.00
Crew Cab	R/L	22400365	m	#.5	0.00
#R&R Both .8					
15 **Spring, Leaf**					
Extended Cab	R/L	15067278	m	#.9	253.56
Crew Cab	R/L	15087915	m	#.9	253.56
#R&R Both 1.6					
16 **Shackle, Spring**	R/L	15049656	m	#.7	24.70
#R&R Both 1.2					
17 **U-Bolt (2/Side)**	R/L	11518875	m		15.40
18 **Spacer, U-Bolt**	R/L	15733656	m	.3	5.93
19 **Hanger, Front Spring**					
Extended Cab	R	12474019	m	#1.5	63.12
	L	12474018	m	#1.5	129.47
Crew Cab	R	12474455	m	#1.5	76.61
	L	12474454	m	#1.5	78.23
#w/Leaf Spring Removed					

W/O 4WS

R&I Suspension/Axle Assy	m	2.5
Check Rear Alignment	m	.8
Add to Adjust Front Alignment		
w/2WD	m	1.1
w/4WD	m	1.3
Bleed Brake System	m	1.0

NOTE: R&I/R&R or O/H Does Not include alignment or bleed brake system.

Illustration Located in Next Column

1 **Rotor, Brake**
1500 Series

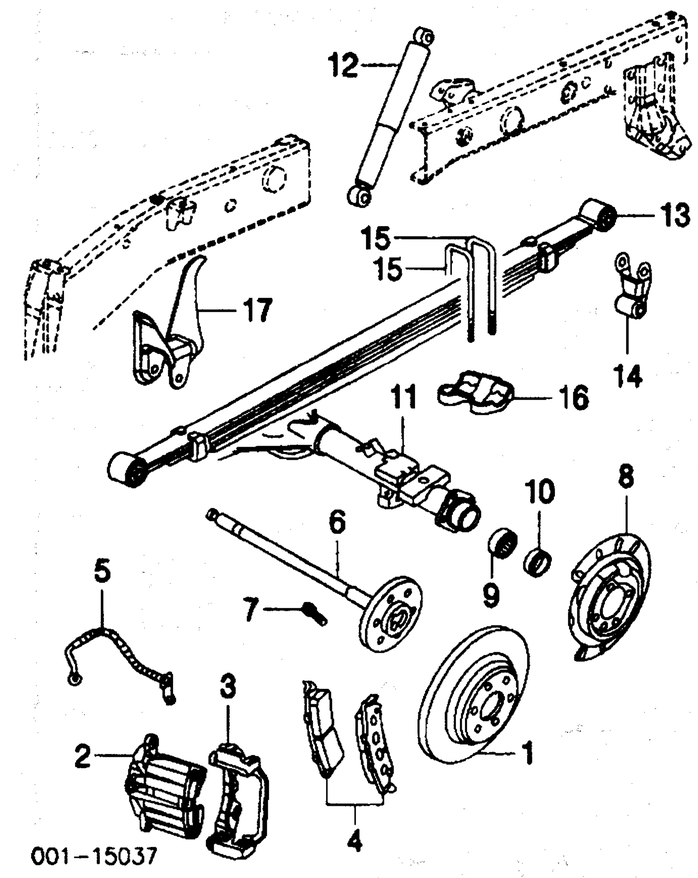

001-15037

Std Cab					
6400 Lb GVW	R/L	15712800	m	#.6	250.30
7200 Lb GVW	R/L	15065077	m	#.6	250.30
Extended Cab					
Chevrolet					
6400 Lb GVW	R/L	15712800	m	#.6	250.30
7200 Lb GVW	R/L	15065077	m	#.6	250.30
GMC					
Sierra	R/L	15712800	m	#.6	250.30
Sierra C3, Sierra Denali	01 R/L	15712802	m	#.6	386.26
	02-03 R/L	15065077	m	#.6	250.30
Crew Cab	R/L	15712801	m	#.6	326.52
2500 Series					
Gas					
4.8L, 5.3L Eng	R/L	15712801	m	#.6	326.52
6.0L, 8.1L Eng	R/L	15712803	m	#.6	386.26
Diesel	R/L	15712803	m	#.6	386.26
3500 Series	R/L	15769474	m	#.6	386.26
#R&R Both Sides 1.0					
2 **Caliper, Brake**					
1500 Series					
Std Cab	99-02 R	18040088	m	#.5	■171.00
	L	18040087	m	#.5	■175.92
	03 R/L	18048080-79	m	#.5	■175.92
Extended Cab					
Chevrolet					
1999-02	R	18040088	m	#.5	■171.00
	L	18040087	m	#.5	■175.92
2003					
6400 Lb GVW	R	18048080	m	#.5	■175.92
	L	18040079	m	#.5	0.00
7200 Lb GVW	R	18043521	m	#.5	■168.00
	L	18043520	m	#.5	■175.92
GMC¶					
Sierra	99-02 R	18040088	m	#.5	■171.00
	L	18040087	m	#.5	■175.92
	03 R	18043521	m	#.5	■168.00
	L	18043520	m	#.5	■175.92
Sierra C3, Sierra Denali	R	18043521	m	#.5	■168.00
	L	18043520	m	#.5	■175.92
Crew Cab	R	18040100	m	#.5	■171.00
	L	18040101	m	#.5	■169.00
2500 Series	R	18040100	m	#.5	■171.00
	L	18040101	m	#.5	■169.00
3500 Series	R/L	18044317-6	m	#.5	■175.92
¶Order by Application					
3 **Bracket, Caliper**					
1500 Series					
Std Cab	99-02 R/L	18040090	m	#.5	72.05
	03 R/L	18048082	m	#.5	0.00
Extended Cab					
Chevrolet	99-02 R/L	18040090	m	#.5	72.05
	03 R/L	18048082	m	#.5	0.00
GMC					
Sierra, Sierra Denali	99-02 R/L	18040090	m	#.5	72.05
	03 R/L	18048082	m	#.5	0.00
Sierra C3	01 R/L	18043519	m	#.5	71.79
Crew Cab	R/L	18040098-9	m	#.5	72.05
2500 Series	R/L	18040098-9	m	#.5	72.05
3500 Series	R/L	18046147	m	#.5	106.86
#R&R One Side Complete, w/Rotor Removed Deduct .3, R&R Both Sides .8					
4 **Pad Set, Brake**					
1500 Series					
Std Cab	99-02	18043346	m	#1.0	■131.88
	03	18048083	m	#1.0	■170.00
Extended Cab					
6400 Lb GVW		18048083	m	#1.0	■170.00
7200 Lb GVW		18043346	m	#1.0	■131.88
Crew Cab		18041762	m	#1.0	■156.60
2500 Series		18041762	m	#1.0	■156.60
3500 Series		18044346	m	#1.0	■238.07
#Deduct .5 for Each Caliper Removed					
5 **Hose, Brake**					
1500 Series					

Procedure Explanation Pages Must Be Used with the Above Text for an Accurate Damage Report.
Comments or suggestions? Need assistance? Call 1-800-854-7030 or 858-578-6550. Ext. 8220. Fax 1-888-256-7969 or 858-549-0629.

REAR SUSPENSION Cont'd

W/O 4WS Cont'd

Std Cab	R/L	15075747-6	m	#.3	34.75
Extended Cab					
Chevrolet					
6400 Lb GVW	R/L	15075747-6	m	#.3	34.75
7200 Lb GVW	R/L	15182261-0	m	#.3	0.00
GMC					
Sierra					
6400 Lb GVW	R/L	15075747-6	m	#.3	34.75
7200 Lb GVW	R/L	15182261-0	m	#.3	0.00
Sierra C3, Sierra Denali	R	15063416	m	#.3	52.63
	L	15063415	m	#.3	60.00
Crew Cab	R/L	15749768-7	m	#.3	34.75
2500 Series	R/L	15749768-7	m	#.3	34.75
3500 Series	R/L	15053551-0	m	#.3	34.75
#w/Caliper Removed Deduct .2					
6 **Shaft, Axle¶**					
1500 Series					
Std Cab, Extended Cab	R/L	12471369	m	#1.3	330.02
Crew Cab	R/L	26060414	m	#1.3	355.84
2500 Series	R/L	26060414	m	#1.3	355.84
2500 HD Series	R	12471329	m	#1.3	333.40
	L	26045426	m	#1.3	133.60
3500 Series	R/L	12471487	m	#1.3	0.00
¶Order by Application					
#Includes R&R Rotor, R&R Both Sides 2.4					
Hub, Wheel					
1500 Series					
Extended Cab					
Sierra C3, Sierra Denali	R/L	26083838	m	#1.5	377.82
2500 Series	R/L	15712805	m	#1.5	103.63
3500 Series	R/L	15715055	m	#1.5	107.95
#Includes R&R Rotor & Axle Shaft, R&R Both Sides 2.8					
7 **Stud, Wheel**					
1500 Series					
Std Cab, Extended Cab (6/Side)	R/L	15027048	m		2.32
Crew Cab (8/Side)	R/L	15718996	m		3.60
2500 Series (8/Side)	R/L	15718996	m		3.60
2500 HD (8/Side)¶	R/L	15741981	m		3.60
3500 (8/Side)¶	R/L	15741981	m		3.60
¶Order by Application					
8 **Plate, Backing**					
1500					
Std Cab	R/L	12472851	m	#.2	18.51
Extended Cab					
Chevrolet	R/L	12472851	m	#.2	18.51
GMC					
Sierra	R/L	12472851	m	#.2	18.51
Sierra C3	01 R/L	12476287	m	#.2	18.51
Sierra Denali	02 R	26094848	m	#.2	18.51
	L	26094846	m	#.2	18.51
Crew Cab	R/L	12473087	m	#.2	80.96
2500¶	R/L	12473087	m	#.2	80.96
3500	R/L	88934790	m	#.2	80.96
#w/Axle Removed					
9 **Bearing, Outer Wheel**					
1500 Series					
Std Cab, Extended Cab	R/L	9442126	m	#1.3	45.21
Crew Cab	R/L	9439561	m	#1.3	65.41
2500 Series	R/L	9428908	m	#1.3	39.65
3500 Series	R/L	15042154	m	#1.3	38.00
¶Order by Application					
Bearing, Inner Wheel					
1500, 2500 Series	R/L	9436881	m	#1.3	58.08
3500 Series	R/L	15042155	m	#1.3	47.50
10 **Seal, Housing**					
1500 Series					
Std Cab	R/L	12471686	m	#1.3	7.82
Extended Cab					
Chevrolet	R/L	12471686	m	#1.3	7.82
GMC					
Sierra	R/L	12471686	m	#1.3	7.82
Sierra C3, Sierra Denali	R/L	26091741	m	#1.3	21.89
Crew Cab	R/L	26057167	m	#1.3	10.51
2500 Series	R/L	26057167	m	#1.3	10.51
3500 Series	R/L	15007008	m	#1.3	17.63
#R&R One Side Complete, Includes R&R Axle Shaft & Brake Rotor, R&R Both Sides 2.4					
11 **Housing, Axle¶**					
1500 Series					
Std Cab, Extended Cab		12471324	m	#6.3	912.61
Crew Cab		12471325	m	#6.3	1031.60
2500 Series					
9-1/2" Ring Gear		12471325	m	#6.3	1031.60
10-1/2" Ring Gear		12471326	m	#6.3	1468.25
3500 Series		12471596	m	#6.3	2479.07
#Includes R&R Rotors, Axle Shaft, Bearings, Seals & Backing Plates					
12 **Absorber, Shock¶**					
1500 Series	R/L	22064865	m	#.5	■60.38
2500 Series	R/L	22064867	m	#.5	■94.56
3500 Series	R/L	22400188	m	#.5	■141.52
¶Order by Application					
#R&R Both Sides .8, w/Axle Housing Removed Deduct .3					
13 **Spring, Leaf**					
1999					
1500 Series					
Std Cab	R/L	15746328	m	#.9	277.30
Extended Cab					
6-1/2 Foot Bed	R/L	15746328	m	#.9	277.30
8 Foot Bed	R/L	15765129	m	#.9	359.30
2500 Series					
7200 Lb GVW	R/L	15711752	m	#.9	253.56
8600 Lb GVW	R/L	15711753	m	#.9	253.56
2000					
1500 Series					
Std Cab	R/L	15765128	m	#.9	277.30
Extended Cab					
6-1/2 Foot Bed	R/L	15765128	m	#.9	277.30
8 Foot Bed	R/L	15765129	m	#.9	359.30
2500 Series					
7200 Lb GVW	R/L	15711752	m	#.9	253.56
8600 Lb GVW	R/L	15711753	m	#.9	253.56
2001-03					
1500 Series					
Std Cab¶	R/L	15765128	m	#.9	277.30
Extended Cab¶					
6-1/2 Foot Bed	R/L	15765128	m	#.9	277.30
8 Foot Bed	R/L	15765129	m	#.9	359.30
Crew Cab	R/L	15081294	m	#.9	253.56
2500 Series	R/L	15081294	m	#.9	253.56
3500 Series	R/L	15063185	m	#.9	383.04
¶Additional Parts &/or Dealer Contact Required					
#R&R Both Sides 1.6					
14 **Shackle, Spring**					
1500 Series	R/L	15049656	m	#.7	24.70
2500 Series	99 R/L	15640442	m	#.7	24.70
	00-03 R/L	15049656	m	#.7	24.70
2500 HD Series	R/L	15075657	m	#.7	24.70
3500 Series	R/L	15049656	m	#.7	24.70
#R&R Both Sides 1.2					
15 **U-Bolt¶ (2/Side)**					
1500 Series	R/L	15002781	m		7.12
2500 Series	R/L	15734233	m		16.14
3500 Series	99-02 R/L	15048186	m		18.93
	03 R/L	11588351	m		18.07
16 **Plate, Anchor¶**					
1500 Series					
Std Cab, Extended Cab	R/L	15712447	m	.3	8.74
Crew Cab	R/L	15711787	m	.3	9.02
2500 Series					
Man Trans	R/L	15730159	m	.3	9.18
Auto Trans	R/L	15711787	m	.3	9.02
2500 HD Series	R/L	15730159	m	.3	9.18
3500 Series	R/L	15730159	m	.3	9.18
17 **Hanger, Front Spring¶**					
1500 Series					
Std Cab, Extended Cab	R	12474019	m	#1.5	63.12
	L	12474018	m	#1.5	129.47
Crew Cab	R	12474455	m	#1.5	76.61
	L	12474454	m	#1.5	78.23
2500 Series	99-00 R/L	12474456	m	#1.5	129.47
	01-03 R	12474455	m	#1.5	76.61
	L	12474454	m	#1.5	78.23
2500 HD Series	R	15004156	m	#1.5	93.88
	L	15004155	m	#1.5	71.75
3500 Series	R/L	12479995	m	#1.5	80.39
¶Order by Application					
#w/Spring Removed					

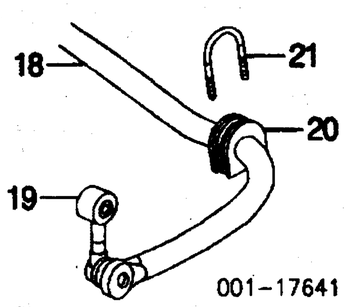

18 **Shaft, Stabilizer**					
3500 Series		15716482	m	#1.0	263.11
#Includes R&R Stabilizer Links, Bushings & Clamps					
19 **Link, Stabilizer Shaft**					
3500 Series	01 R/L	15016991	m	.4	43.16
	02-03 R/L	15089907	m	.4	94.30
20 **Bushing, Stabilizer Shaft**					
3500 Series	R/L	15639063	m	#.3	6.04
21 **Bolt, Stabilizer Shaft**					
3500 Series	R/L	15639065	m	#.3	9.26
Clamp, Stabilizer Shaft					
3500 Series	R/L	15639064	m	#.3	5.98
#R&R One Side Complete					

REAR STEERING LINKAGE/GEAR

W/4WS

R&I Rear Steering Gear Assy ..... m 2.0

NOTE: R&I/R&R or O/H Does Not include alignment or bleed brake system.

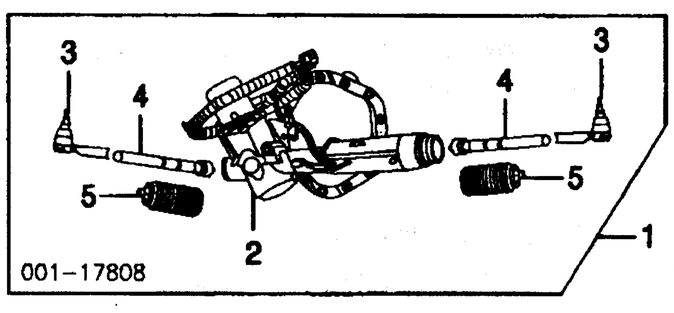

1 **Gear Assy, Steering**		26089466	m	2.3	0.00
2 **Motor Assy, Steering Gear¶**		26091591	m	.9	0.00
3 **Rod, Outer Tie¶**	R/L	26091587	m	.4	78.82
4 **Rod, Inner Tie¶**	R/L	26091588	m	#.7	87.56
#Includes R&R Outer Tie Rod & Boot					
5 **Boot, Tie Rod¶**	R/L	26091589	m	#.4	53.89
¶Included w/Steering Gear Assy					

#Includes R&R Outer Tie Rod

FUEL TANK

R&I Fuel Tank 1.1
Add to R&I/R&R Fuel Tank w/Tank Shield 6

NOTE: R&R Does Not include drain and refill.

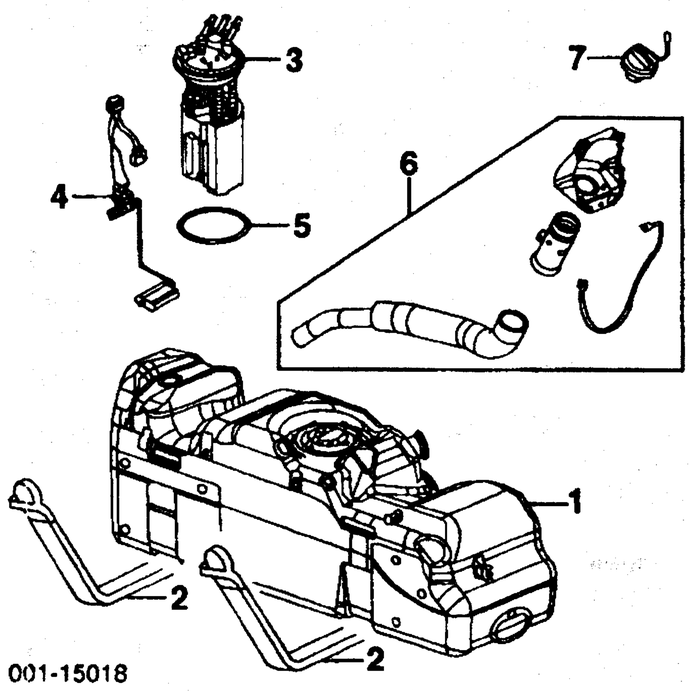

1 **Tank, Fuel¶**					
1999-00					
Gas					
6-1/2 Foot Bed		15749436	m	#1.4	441.76
8 Foot Bed		15749437	m	#1.4	441.76
Diesel					
6-1/2 Foot Bed		15034240	m	#1.4	d359.00
8 Foot Bed		15034241	m	#1.4	d359.00
2001-02					
1500 Series					
6-1/2 Foot Bed					
Std Cab, Extended Cab	01	15749436	m	#1.4	441.76
	02	15772873	m	#1.4	441.76
Crew Cab		15016158	m	#1.4	441.76
8 Foot Bed		15769748	m	#1.4	441.76
2500 Series					
6-1/2 Foot Bed					
Gas					
Std Cab, Extended Cab		15772873	m	#1.4	441.76
Crew Cab		15772874	m	#1.4	441.76
Diesel		15769747	m	#1.4	441.76
8 Foot Bed					
Gas		15769748	m	#1.4	441.76
Diesel		15769749	m	#1.4	441.76
3500 Series					
Gas		15769748	m	#1.4	441.76
Diesel		15769749	m	#1.4	441.76
2003					
1500 Series					
Std Cab, Extended Cab					
6-1/2 Foot Bed		15772873	m	#1.4	441.76
8 Foot Bed		15772876	m	#1.4	441.76
Crew Cab		15016158	m	#1.4	441.76
2500 Series					
Diesel					
6-1/2 Foot Bed		15772875	m	#1.4	441.76
8 Foot Bed		15772877	m	#1.4	441.76
Gas					
6-1/2 Foot Bed		15772873	m	#1.4	441.76
8 Foot Bed					
2500 HD Series		15772874	m	#1.4	441.76
3500 Series					
Diesel		15006847	m	#1.4	441.76
Gas		15772876	m	#1.4	441.76
¶Order by Application					
#w/Tank Shield Add .6, Includes R&R Gauge & Pump					
2 **Strap, Tank**	R/L	15063196		#.4	9.05
#R&R Complete, Included In R&R Fuel Tank					
3 **Module Assy, Fuel Pump¶**					
Gas		25176865	m	#1.4	■440.21
Diesel		25326856	m	#1.4	■386.80
4 **Sensor, Fuel Level¶**					
Gas (a)	99-01	25314460	m	#1.4	119.26
	02-03	25345176	m	#1.4	0.00
Diesel		25320421	m	#1.4	113.58
¶Order by Application					
(a) Included w/Fuel Pump Module Assy					
#R&R Complete, Included In R&R Fuel Tank					
5 **Seal, Module**		15734493			5.72
6 **Pipe, Fuel Tank Filler¶**					
Gas					
Fleetside		15747585		.6	82.88
Stepside		15747588		.6	82.88
Diesel		15747586		.6	82.88
7 **Cap, Filler**					
Gas		15763227			12.21
Diesel¶		15763226			11.89
¶Order by Application					

Labor Times Shown are for Replacement with New OEM Undamaged Parts on New Undamaged Vehicles.
Comments or suggestions? Need assistance? Call 1-800-854-7030 or 858-578-6550. Ext. 8220. Fax 1-888-256-7969 or 858-549-0629.

REAR LAMPS

COMBINATION LAMP FLEETSIDE PICKUP

R&I Tail Lamp Assy ..... R/L #.3
#Included in R&R Box Assy or Rear Fender Panel

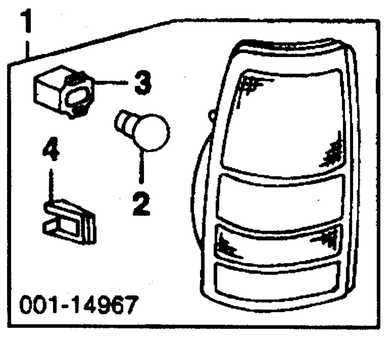

1 **Lamp Assy, Combination**				
1500, 2500 Series	R/L	15075532-1	#.3	114.40
3500 Series	R/L	15767591-0	#.3	114.40
#Included in R&R Box Assy or Rear Fender Panel				
2 **Bulb¶ (3/Side)**	R/L	12450108	.1	■2.55
3 **Cap, Vent Opening¶**	R/L	16517099		3.60
4 **Retainer¶**	R/L	16525098		2.70
¶Included w/Combination Lamp Assy				

COMBINATION LAMP STEPSIDE PICKUP

R&I Tail Lamp Assy ..... R/L #.3
#Included in R&R Box Assy or Rear Fender Panel

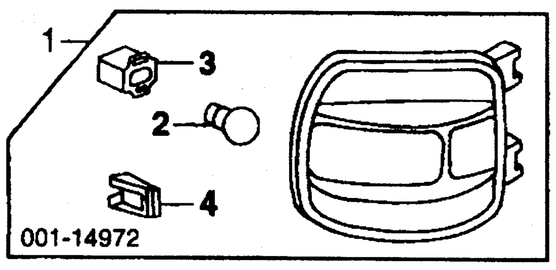

1 **Lamp Assy, Combination**	R/L	15075538-7	#.3	114.40
#Included in R&R Box Assy or Rear Fender Panel				
2 **Bulb¶ (3/Side)**	R/L	12450108	.1	■2.55
3 **Cap, Vent Opening¶**	R/L	16517099		3.60
4 **Retainer¶**	R/L	16525098		2.70
¶Included w/Combination Lamp Assy				

COMBINATION LAMP CAB & CHASSIS

R&I Combination Lamp Assy ..... R/L .3
#Included in R&R Frame

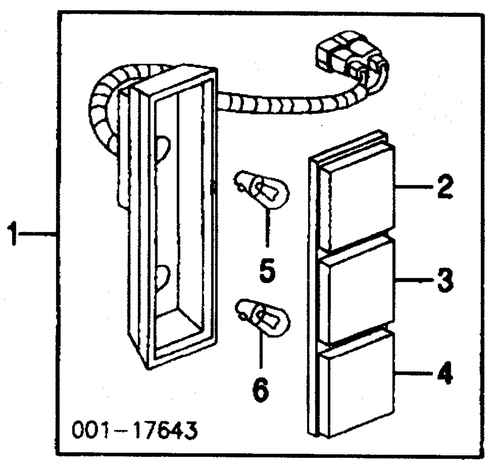

1 **Lamp Assy, Combination**				
2500	R/L	15029718-7	#.3	66.25
2500 HD, 3500	R/L	15048276-7	#.3	114.40
#Included in R&R Frame				
2 **Lens, Turn Signal Lamp¶**	R/L	12474502	#.4	16.60
3 **Lens, Tail Lamp¶**	R/L	12474501	#.4	16.60
4 **Lens, Back-Up Lamp¶**	R/L	12474500	#.4	16.60
#R&R One Side Complete				
5 **Bulb, Turn Signal/Back-Up Lamp¶** (2/Side)	R/L	9417866	.1	■.98
6 **Bulb, Stop/Tail Lamp¶**	R/L	9428902	.1	■.80
¶Included w/Combination Lamp Assy				

CLEARANCE LAMP

R&I Side Clearance Lamp
Front ..... R/L .2
Rear ..... R/L .2
R&I Pickup Box Lamp 3

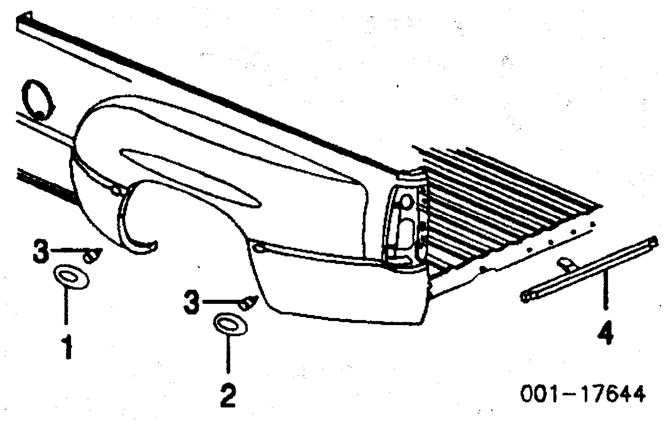

Lamp, Side Clearance				
1 Front	R/L	16530173	.2	32.00
2 Rear	R/L	16530175	.2	32.00
3 **Bulb, Side Lamp**				
Front	R/L	9421330	.1	■.62
Rear	R/L	9421330	.1	■.62
4 **Lamp, Pickup Box**		15744722	.3	22.30
Bulb, Pickup Box Lamp		N.A.	.1	0.00

LICENSE LAMP

R&I License Lamp
w/Impact Strip ..... R/L #.2
w/o Impact Strip ..... R/L #.2
#Included in R&R Face Bar

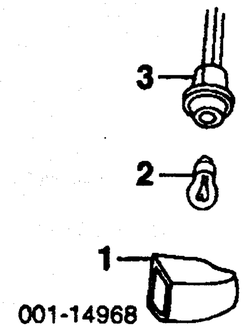

1 **Lamp, License**				
w/Rear Bumper				
1999-00				
w/Impact Strip	R/L	15049281	#.2	10.70
w/o Impact Strip	R/L	15049280	#.2	10.50
2001-03	R/L	15082619	#.2	10.50
w/o Rear Bumper	99-00	15154884	#.2	27.10
	01-03	15048278	#.2	43.70
#Included in R&R Face Bar				
2 **Bulb**	R/L	9421330	#.1	■.62
#Included in R&R License Lamp				
3 **Socket**	R/L	12141388	#.1	38.44
#w/Lamp Assy Removed				

HIGH MOUNT STOP LAMP

R&I Stop Lamp Housing Assy ..... #.3
#Included in R&R Roof Panel

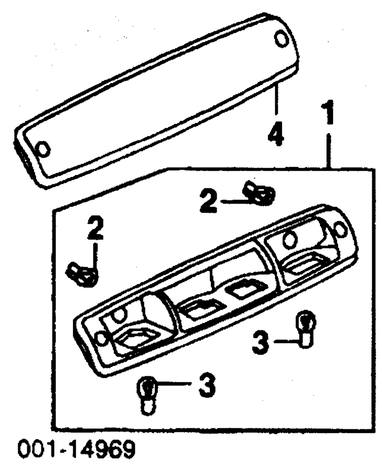

1 **Housing Assy, Stop Lamp**	5978318	#.3	57.00
#Included in R&R Roof Panel			
Bulb¶ (2/Side)			
2 1 Amp	9437173	.1	■1.88
3 1.4 Amp	12450313	.1	■.96
¶Included w/Stop Lamp Housing Assy			
4 **Cover, Stop Lamp**	5978459		46.70

REAR BUMPER

Use Procedure Explanations 27 and 28 with the following text.

W/SPORT PKG

Refinish Bumper Cover 2.5
R&I Bumper Assy 5
O/H Bumper Assy (Includes R&I) 1.2
Add to R&I/R&R or O/H Bumper Assy
w/Towing Pkg ..... #.3
#Includes Disconnecting Hitch from Bumper Assy

NOTE: All Parts in this section are included in overhaul unless noted otherwise.

Bar, Bumper		15178164	1.2	0.00
Cover, Bumper		12335660	.9	0.00
Bracket, Cover	R/L	15182649-8		0.00
Bracket, Bumper	R/L	15705674-3	IOH	29.39
Brace, Bumper	R/L	15705670-69	IOH	27.56

W/O SPORT PKG

Refinish Face Bar 1.8
R&I Bumper Assy 5
O/H Bumper Assy (Includes R&I) 1.2
Add to R&I/R&R or O/H Bumper Assy
w/Towing Pkg ..... #.3
#Includes Disconnecting Hitch from Bumper Assy

NOTE: All Parts in this section are included in overhaul unless noted otherwise.

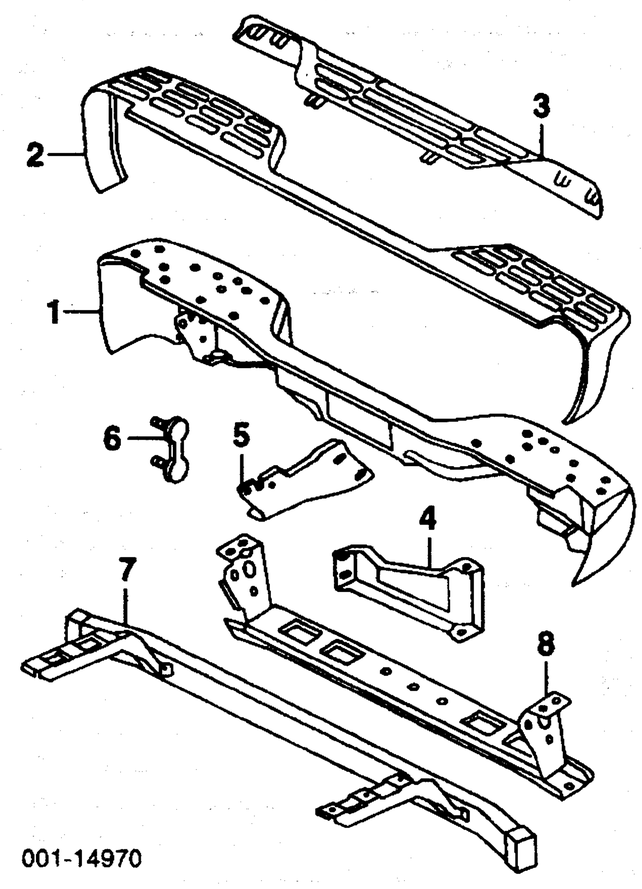

Bumper Kit, Rear Step (Chrome)¶				
Fleetside		12496085	1.2	388.00
Stepside		12496087	1.2	388.00
¶Accessory Part Number listed, Contact Dealer for Included Components & Local Pricing				
1 **Bar, Face**				
Chrome				
Fleetside		12473000	1.2	458.14
Stepside		12472999	1.2	458.14
Painted				
Black		15755409	1.2	458.14
Green		15755411	1.2	458.14
Pewter		15755410	1.2	458.14
Silver		12473001	1.2	446.44
2 **Pad, Step**				
1500, 2500 Series				
Fleetside	R/L	15738018-7	.5	44.64
Stepside	R/L	15738020-19	.5	44.64
2500 HD, 3500 Series	R/L	15758744-3	.5	46.47
3 **Pad, Center Step**		15083287	.3	40.98
4 **Brace, Bumper**				
1500, 2500 Series				
Fleetside	R/L	15705670-69	IOH	27.56
Stepside	R/L	15153420-19	IOH	28.88
2500 HD, 3500 Series	R/L	15154967-8	IOH	35.19
5 **Bracket, Bumper**				
1500, 2500 Series	R/L	15705674-3	IOH	29.39
2500 HD, 3500 Series	R/L	15154970-69	IOH	30.41
6 **Plate, Anchor**	R/L	15008506		5.80
7 **Hitch Assy, Trailer-See Frame Section**				
8 **Bar, Trailer Hitch**		15154375	#.8	147.56
#Not Included in O/H				